P&H

Type Crane

Serial No. 12362-3

REPAIR PARTS MANUAL

HARNISCHFEGER CORPORATION

4400 W. National Avenue, • Milwaukee 46, Wisconsin • U. S. of A.

DIESEL ENGINES · POWER SHOVELS · PRE-FABRICATED HOMES · ELECTRIC HOISTS SOIL STABILIZERS · TRUCK CRANES · OVERHEAD CRANES WELDING EQUIPMENT

MANUALES Y PLANOS
LLEGAN A BONETE
10 AÑOS TARDE

P&H

HARNISCHFEGER CORPORATION

4400 WEST NATIONAL AVE.
MILWAUKEE 46, WISCONSIN

Date November 2, 1955.

Roberto Maisonnave, Eng.,
Rincon del Bonete,
Paso de los Toros,
URUGUAY, South America.

Attention:

SUBJECT: Repair Parts Manuals for Crane s/n 12362-3

OUR REFERENCE NO: M-512-10C

Gentlemen:

Thank you very much for the above request.

☐ This request will be fulfilled within the next few days.

Before this transaction can be satisfactorily completed, the following will be required.

☐ Serial number of machine involved.

☒ ~~XXXXXX~~ Enclosed are 2 Repair Parts Manuals.

In any future correspondence relative to this request, kindly refer to our reference number for more expeditious handling.

Yours very truly,

HARNISCHFEGER CORPORATION

Marvin Karsten

Marvin Karsten.

Repair Sales Division

FOUNDED IN 1884 QUALITY P&H SERVICE

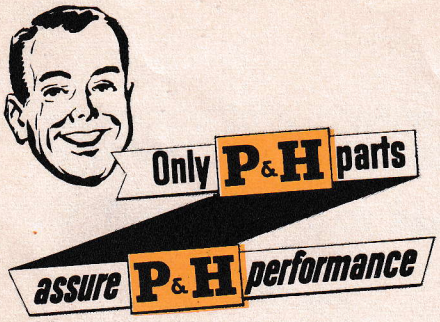

Type Crane

Serial No. 12362-3

Purchaser Comision Technicay-Financiere
De Las Obras Hidroelectricas
De Rio Nergo Rione, Uruguay

Purchaser's Order No.

Shipped To Same as above

Capacity 130/25 Ton	Bridge Type PS	Trolley Type RS/KR
Span 70'-2½"	Spread 13'-0"	Lift 57'-5"
Girders Box	Trolley Rail 100#	Runway Rail KS-#7
Voltage 380	Phase 3	Cycle 50
Motors HEW	Controllers RCS	

Branch Office

Warehouse

HARNISCHFEGER CORPORATION
MILWAUKEE 46, WISCONSIN

HARNISCHFEGER CORPORATION
MILWAUKEE 14, WISCONSIN

INDEX FOR FOUR MOTOR P&H CRANE

SECTION 1

TROLLEY MECHANICAL PARTS — ILLUSTRATION NO.

[illegible] . . . . .
Main Hoist Unit. 100A1168-914A7
Main Hoist Bottom Block. 100E641
Reeving Sketch S-4499
Aux. Hoist Unit. CHU-3
Aux. Hoist Bottom Block. CHU-4
Reeving Sketch C-29
Trolley Drive Assembly 100E642
[illegible] . . . . .

SECTION 2

BRIDGE MECHANICAL PARTS

Bridge & Cross Shafting. CBD-1
Gear Case Assembly CBD-7
Truck Assembly 100E792
Cross Shaft Bracket. CBD-4
Bumper C-11

[illegible] . . . . .
[illegible] . . . . .
[illegible] . . . . .
[illegible] . . . . .

SECTION 3

MOTORS

Main Hoist Motor CM-1
Aux. Hoist Motor CM-1
Trolley Motor CM-1
Bridge Motor CM-1

SECTION 4

BRAKES

Main Hoist Motor Brake CB-6 1350600
Aux. Hoist Motor Brake CB-6 1150300
Trolley Motor Brake. CB-6 75080
Bridge Motor Brake 100A1079-CB-9
[illegible] . . . . .
[illegible] . . . . .
[illegible] . . . . .
[illegible] . . . . .

HARNISCHFEGER CORPORATION
MILWAUKEE 14, WISCONSIN

SECTION 5

CONTROL EQUIPMENT	ILLUSTRATION NO.
Main Hoist Controller	CC-1
Aux. Hoist Controller	CC-1
Trolley Controller	CC-1
Bridge Controller	CC-1
Main Hoist Controller Segment Layout	~~K52765~~ K52675
Aux. Hoist Controller Segment Layout	~~K52765~~ K52675
Trolley Controller Segment Layout	100E411
Bridge Controller Segment Layout	100E411
~~Main Hoist Controller~~ Diagram. } ~~Aux. Hoist Controller~~ Diagram. } ~~Trolley Controller~~ Diagram. } ~~Bridge Controller~~ Diagram. } **Complete**	101A18
Main Hoist Resistor	CC-13
Aux. Hoist Resistor	CC-13
Trolley Resistor	CC-13
Bridge Resistor	CC-13
~~Main Hoist Magnetorque Resistor~~	
~~Aux. Hoist Magnetorque Resistor~~	
Main Hoist Resistor Diagram	52582-Res.
Aux. Hoist Resistor Diagram	52398-Res.
Trolley Resistor Diagram	42523-Res.
Bridge Resistor Diagram	42732-Res.
Crane Protective Panel	CC-25
Switchboard Wiring Diagram	
~~Main Hoist Control Panel~~	
~~Aux. Hoist Control Panel~~	
~~Trolley Control Panel~~	
~~Bridge Control Panel~~	
Main Hoist Limit Switch	CC-6-CH Pub 7708
Aux. Hoist Limit Switch	CC-6-CH Pub 7708

SECTION 6

MISCELLANEOUS	
Trolley Collector	CC4
Main Line Collector	Feed Rail
Bridge Support Boards & Wires	C-9
Runway Material	Feed Rail

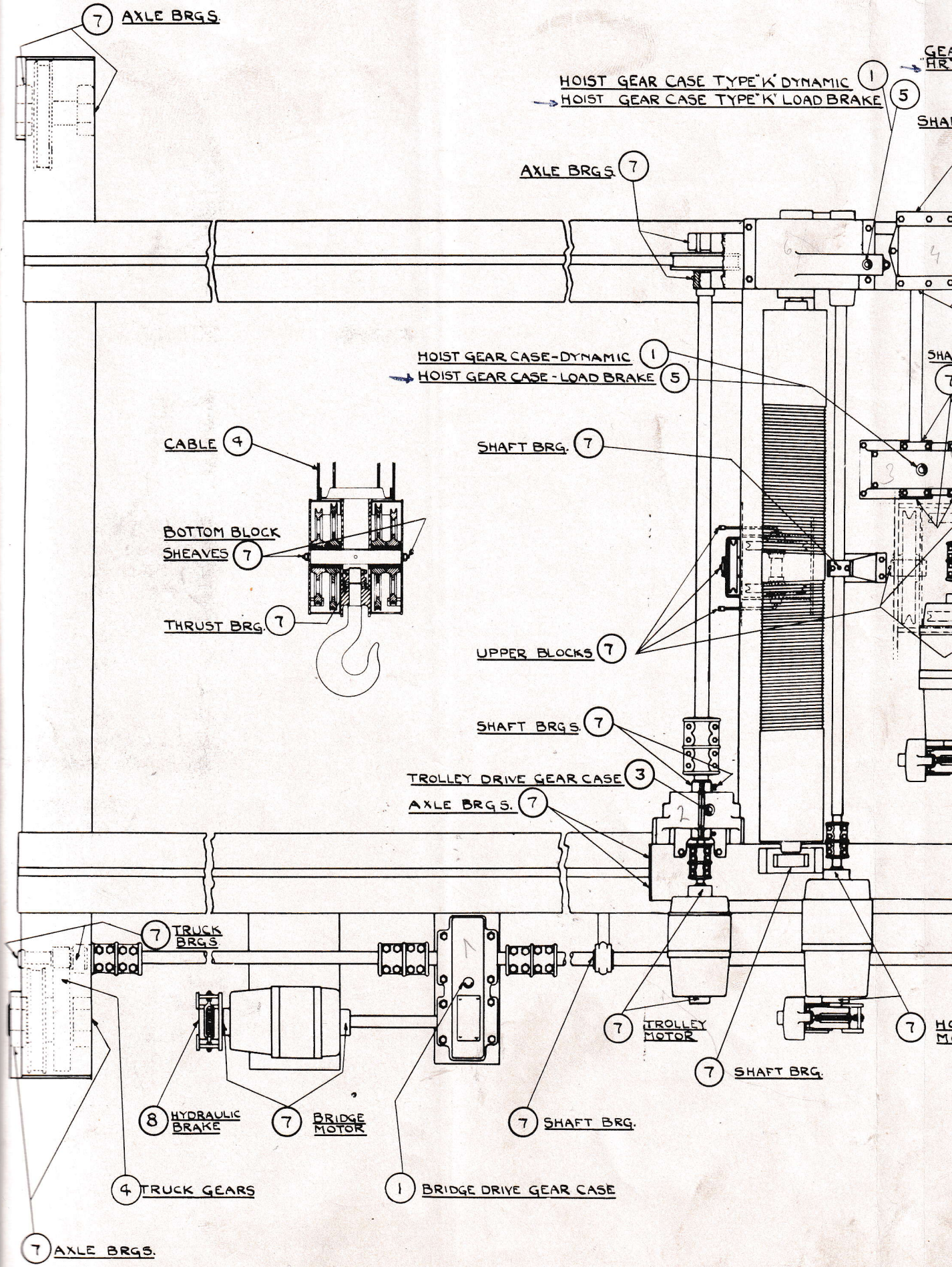
7 AXLE BRGS.
HOIST GEAR CASE TYPE "K" DYNAMIC 1
HOIST GEAR CASE TYPE "K" LOAD BRAKE 5
AXLE BRGS. 7
HOIST GEAR CASE-DYNAMIC 1
HOIST GEAR CASE - LOAD BRAKE 5
CABLE 4
SHAFT BRG. 7
BOTTOM BLOCK SHEAVES 7
THRUST BRG. 7
UPPER BLOCKS 7
SHAFT BRGS. 7
TROLLEY DRIVE GEAR CASE 3
AXLE BRGS. 7
7 TRUCK BRGS.
7 TROLLEY MOTOR
7 SHAFT BRG.
8 HYDRAULIC BRAKE
7 BRIDGE MOTOR
7 SHAFT BRG.
4 TRUCK GEARS
1 BRIDGE DRIVE GEAR CASE
7 AXLE BRGS.

CHART
TYPE

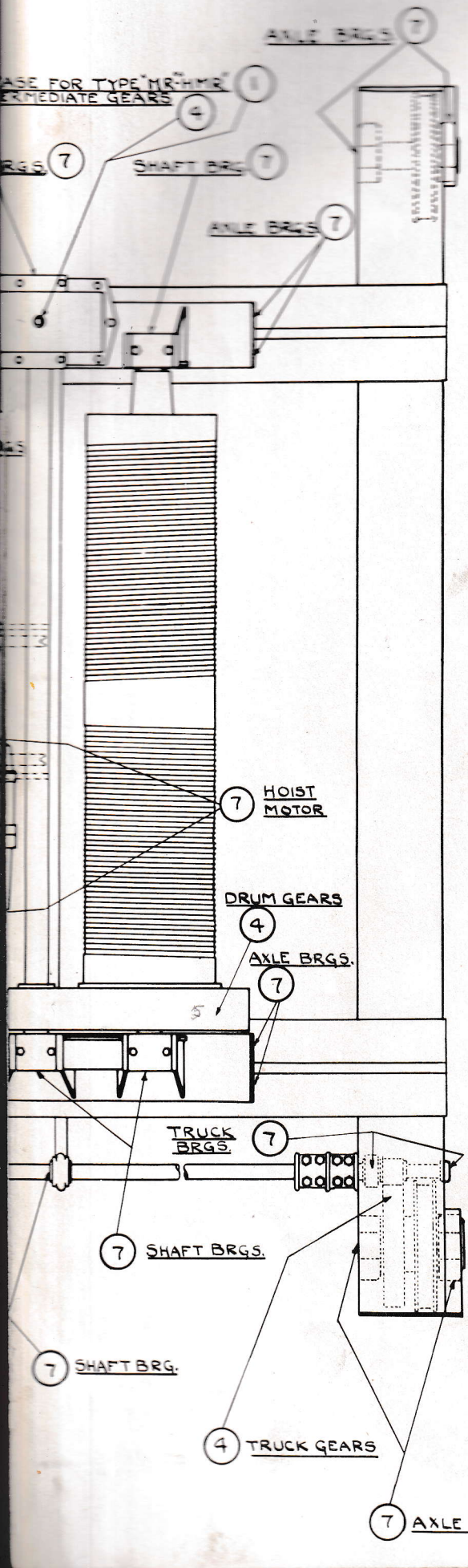

LUBRICANT RECOMMENDATIONS FOR OVERHEAD TRAVELING CRANES

NAME OF PART	METHOD	LUBRICATION		FREQUENCY OF APPLICATION
		Above 32° F	Below 32° F	
Hoisting Gear Cases (Except Load Brake) Bridge Drive Gear Case	Splash Splash	#1	#2	Check Weekly Change every 3000 Hrs.
Trolley Drive Gear Case	Splash	#3	#1	Check Weekly Change every 3000 Hrs.
Guarded Gears & Cables Hoist Intermediate, Drum Bridge Truck Drive	Apply Manually	#4	#4	50 Hrs.
Mechanical Load Brake	Splash	#5	#6	3000 Hrs.
Anti Friction Bearings	Gun or Packed	#7	#7	2000 Hrs. (Block Sheaves Upper & lower) Every 50 Hrs.
Sleeve Bearings	Grease Cup	#7	#7	8 Hrs.
MCB Axle Boxes	Waste Packed	#3	#2	Add Oil Every Month Remove Waste Yearly Clean & Replace
Ring Oiled Bearings (Motors)	Ring	#6	#6	Change every 3000 Hrs.
Hydraulic Brakes		#8		Check every 200 Hrs.

LUBRICATION SPECIFICATION

1. Leaded Gear Lubricant No. 5 . . . . . AGMA No. 6
   Or Universal Gear Lubricant SAE 140 . . . . . AGMA No. 6
2. Leaded Gear Lubricant No. 3 . . . . . AGMA No. 5
   Or Universal Gear Lubricant SAE 90 . . . . . AGMA No. 5
3. Leaded Gear Lubricant No. 7 . . . . . AGMA No. 8
   Or Universal Gear Lubricant SAE 250 . . . . . AGMA No. 8
4. Viscous Open Gear Lubricant
   (Non Asphaltic Type Preferred)
5. Inhibited Straight Mineral Oil 700-1000 S.U.S. @100° . . . . . AGMA No. 4
6. Inhibited Straight Mineral Oil 280-360 S.U.S. @100° . . . . . AGMA No. 2
7. Multipurpose Grease No. 2 . . . . . N.L.G. I. No. 2
8. Lockheed Hydraulic Brake Fluid No. 21
   Or For Zero F. or Below No. 21B.

The amount of attention a crane should receive for lubrication depends wholly upon the degree of service and temperature condition. A hard worked sleeve bearing crane should receive daily care, while a roller bearing crane should require not more than weekly attention. Adequate lubrication must be given sleeve bearings while excess lubrication is a detriment to roller or ball bearings.

Keep all oil and grease wiped up around bearings and the crane in general. Clean fittings before lubricating.

Avoid filling gear cases above oil levels or more than to keep gears dipping into lubricant.

Consult your local lubricant representative for his brand offering on above recommendations.

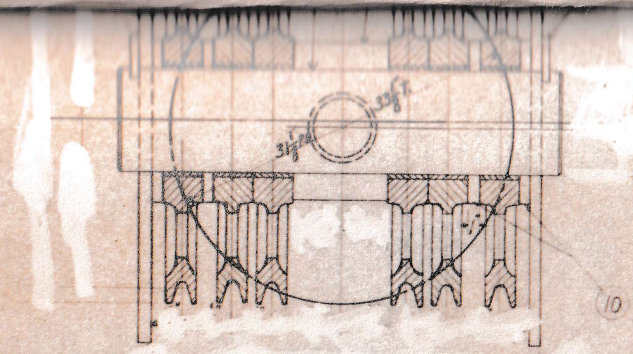

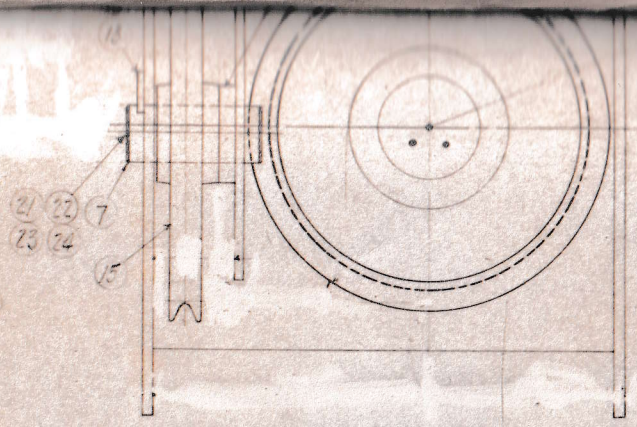

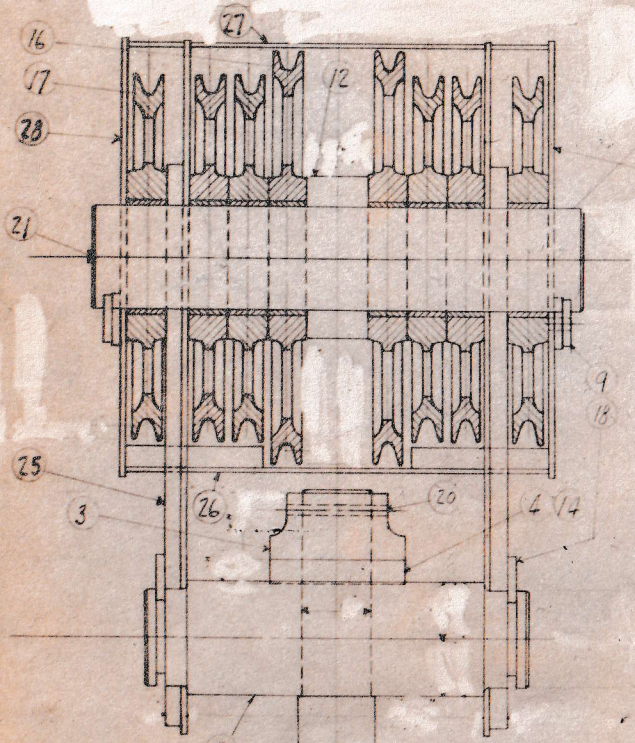

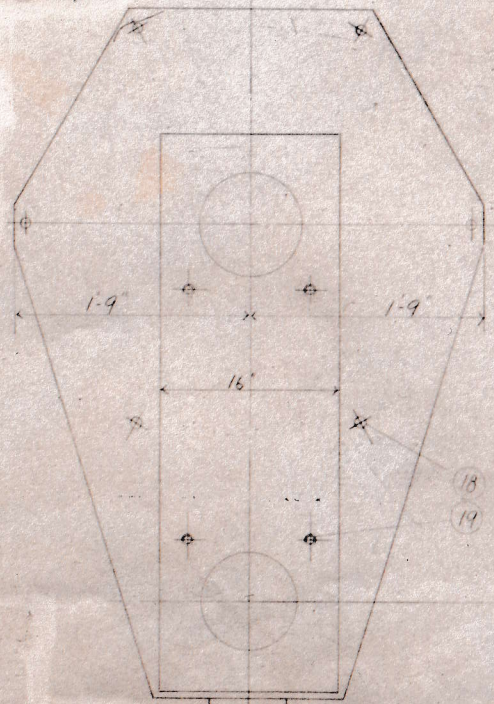

3	3K54650	1	NOSE NUT		
4	4K54650	1	DUST GUARD		
5	5K54650	1	BRT. SH. PIN		
6	6K54650	1	BLOCK SH. PIN		
7	7K54650	1	EQ. SH. PIN		
8	8K54650	1	WASHER		ST. PL.
9	9K54650	6	KEEPER PLATE		NSS 1070
10	10K54650	8	WASHER		ST. PL.
11	11K54650	1	SPACER	K54650-H	C.I. #71
12	12K54650	1	SPACER	K54650-E	C.I. #71
13	18T23	2	KEEPER PLATE		ST PL.
14		1	BANTAM THRUST BRG.	LR 65	
15	7H337CHFI	1	EQ. SHEAVE WITH BUSH.	A1814DAI	C.I. #74
16	7H338-FI	2	SHEAVE WITH BUSH.	7H338	C.I. #74
17	7H339-FI	12	SHEAVE WITH BUSH.	7H339	C.I. #74
18		14	7/8" x 2" C.S. & LW		
19		12	7/8" x 4 3/4" M.B. & LW.		
20		1	3/4" x 10" M.B.		
21		15	1/2" I.A.N.		
22		7	1/4" x 90° STREET ELL.		
23		7	1/4" PIPE NIPPLE x 1-8 LG.		
24		7	1/4" PIPE COUP.		
25	A-K54650	2	SIDE PLATES		STRUCT WELD
26	B-K54650	1	ROPE GUARD		STRUCT WELD
27	C-K54650	1	ROPE GUARD		STRUCT WELD
28	D-K54650	2	ROPE GUARD		STRUCT WELD

TYPE HOOK	DWG No. ITEM (1)
~~TWIN HOOK - PLAIN~~	8 F 347
TWIN HOOK - WITH EYE	8 F 349

BOTTOM BLOCK - LIST # 78670

~~UPPER BLOCK - LIST # 78781~~

16 PARTS 1" ROPE CR. 10758 & 10760

11995
11984

MAIN HOIST

1 PLAIN

1 WITH EYE

ALL MACHINE DIMENSIONS TO BE HELD TO ± UNLESS OTHERWISE SPECIFIED

PART NO.	MATERIAL OR SIZE REQ.	DESCRIPTION	REV.	REVISED

ILLUSTRATION CHU-3

KR LOAD BRAKE HOIST UNIT

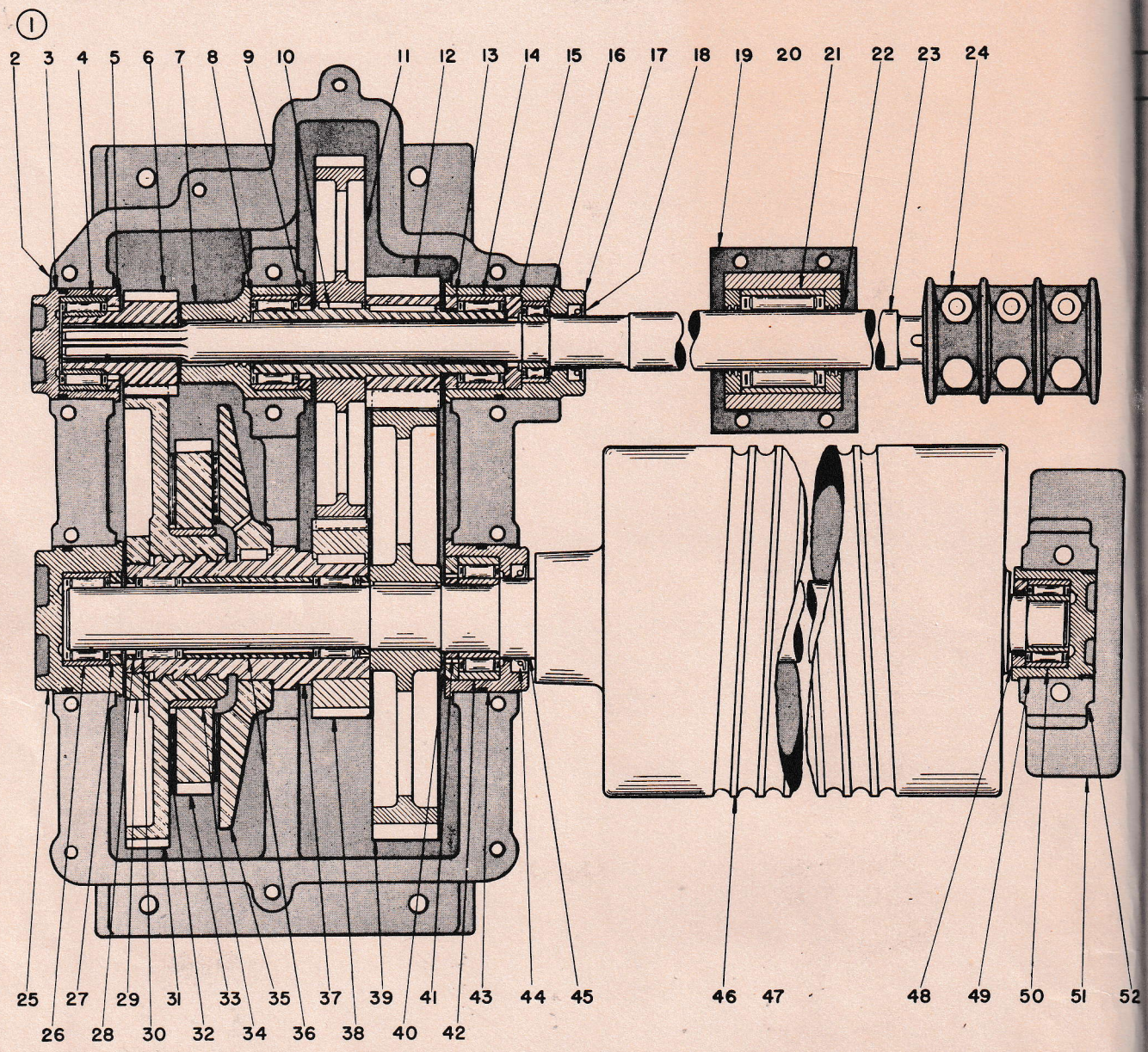

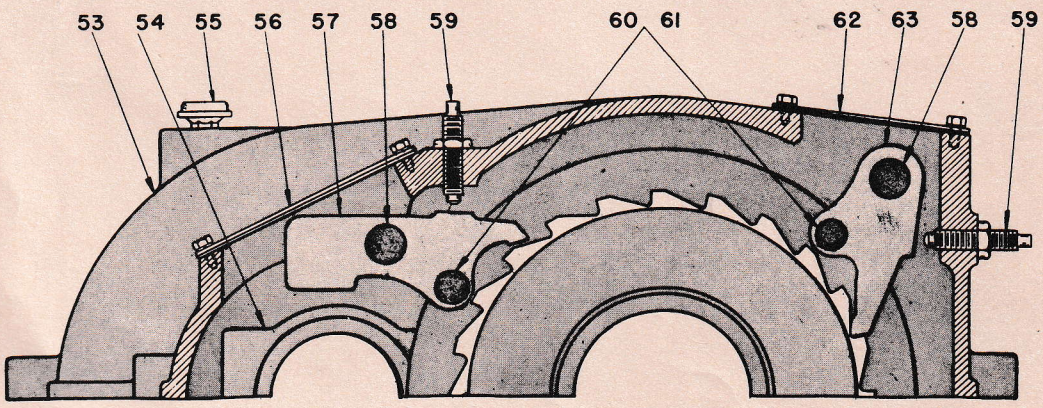

HARNISCHFEGER CORPORATION — MILWAUKEE 46, WISCONSIN

ILLUSTRATION CHU-3-4

KR 14 LOAD BRAKE HOIST UNIT

AUX. HOIST

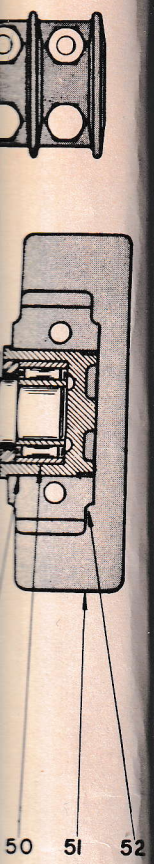

REF. NO.	DESCRIPTION	PART NUMBER	AMOUNT REQUIRED
	CRANE 12362-3		
1	NOT USED		
	INCLUDES ITEMS 31,33,35,37		
2	GEAR CASE BASE	14A53	1
	W/ PIPE PLUG	2423V005	1
	WHEN COMPLETE GEAR CASE IS REQUIRED		
	THE FOLLOWING ITEMS ARE TO BE ADDED		
	MACHINE BOLT	0609V205	4
	MACHINE BOLT	0609V251	4
	MACHINE BOLT	0610V252	4
	COUPLING BOLT	20H1554D1	2
	PIN HD BOLT	20T1591	2
	HEX NUT	2007V009	10
	DOWEL BRASS	20H1951D15	5
	ITEM 53 AND 54		
	LOCKWASHER 3/4 IN	3615V015	6
	LOCKWASHER	3615V016	10
	HEX NUT 3/8 IN	2007V008	6
	SLOTTED NUT 3/4 IN	2029V008	2
3	BEARING RETAINER	25H816	1
	W/ OIL SEAL	18H3867D22	1
4	BEARING HYATT W-213	25Z88D8	1
5	RETAINER RING	18H1924	1
6	MOTOR PINION	1H1618	1
	W/ INNER RACE HYATT IRW-213	25Z89D8	1
7	BEARING RETAINER	25H813	1
8	BEARING HYATT CW-213	25Z92D8	1
9	RETAINER RING	18H1924	1
10	SLEEVE	18H1923	1
	W/ S F KEY	20H1437D8	1
	S F KEY	20H1437D11	1
11	INTERMEDIATE GEAR	1F1637	1
12	DRUM PINION	1H1616	1
13	RETAINER RING	18H1924	1
14	BEARING HYATT CW-213	25Z92D8	1
15	SPACER	18H2032	1
16	BEARING HYATT 211	25Z83D6	1
17	BEARING RETAINER	25H909	1
	W/ITEM 18		
	W/ OIL SEAL	18H3867D22	1
18	OIL SEAL PERFECT SERVIS 362220	18F681D134	1
19	BEARING PEDISTAL	25F357	1
	MACHINE BOLTS 5/8 X 5-1/2 IN	0609V168	2
	LOCKWASHER 5/8 IN	3619V013	2
	HEX NUT 5/8 IN	2045V007	2
	DOWEL BRASS 15/32 X 3/4 IN	19H1951D15	2
20	CAP FOR BEARING PEDESTAL NOT SHOWN	25H1164	1

IMPORTANT: READ "INSTRUCTIONS" WHEN ORDERING REPAIR PARTS

REF. NO.	DESCRIPTION	PART NUMBER	AMOUNT REQUIRED
21	BUSHING	5T602	1
22	NOT USED		
23	MOTOR COUPLING SHAFT	10F1488	1
	W/ INNER RACE HYATT 1R-211	25Z84D6	1
24	COUPLING	18F297-C1-F1	1
25	BEARING RETAINER	25F1163	1
	W/ OIL SEAL	18H3867D29	1
26	BEARING HYATT CW-212	25Z92D7	1
27	RETAINER RING	18H810	1
28	RETAINER RING	18H1926	2
29	ADJUSTING NUT	20H813	1
	W/ MACHINE BOLT	0609V122	1
	LOCKWASHER		
	HALF DOG POINT ALLEN SAFETY SET SCREW 3/8 X 1-1/2 IN		1
30	BEARING HYATT RAW-213	25Z90D8	
31	LOAD BRAKES GEAR MOTOR GEAR	1F1028	1
32	ASBESTOS DISC. P&H TYPE V	2-915H19	2
	W/ FLAT HD RIVETS BRASS	20H1658D14	36
33	LOAD BRAKE RATCHET	915H19-F1	1
	INCLUDES ITEMS 32& 34		
34	RATCHET BUSHING	5H793	1
35	LOAD BRAKE DISC	15H293	1
36	SPACER	18H1925	1
37	NOT USED		
	W/ S F KEY	20H1447D2	1
	S F KEY	20H1447D7	1
	ITEM 29		
38	LOAD BRAKE GEAR	1F1636	1
	W/ S F KEY	20H1447D2	1
	ITEM 29 OMIT WHEN ITEM 37 IS REQD		
39	DRUM GEAR	1F487	1
40	RETAINER RING	18H2033	1
41	SPACER	18H1934	1
42	BEARING HYATT 217	25Z83D12	1
43	BEARING RETAINER	25H916	1
	W/ OIL SEAL	18H3867D33	1
	ITEM 44		
44	OIL SEAL PERFECT 4874	18F681D159	1
45	DRUM SHAFT DRIVER	10H3596	1
	W/ S F KEY	20H1447D23	1
	W/ S F KEY	20H814	2
	INNER RACE HYATT IR 217	25Z84D12	1
	DRUM SHAFT IDLER	10H2077	1
	W/ INNER RACE HYATT IRW 212	25Z69D12	1
46	ROPE DRUM 13 FT 0 IN SPREAD	25F690-S	1
	W/ ROPE CLIP	8H197	2
	CAP SCREW	0626V134	4

REF. NO.	DESCRIPTION	PART NUMBER	AMOUNT REQUIRED
	LOCKWASHER	3615V015	4
47	HOIST ROPE 3/4 IN X 780 FT 0 IN LONG	TYPE 8	1
48	RETAINER RING	18H316	1
49	BEARING RETAINER	25H948	1
50	BEARING HYATT W-212	25Z68D7	1
51	BEARING PEDESTAL C.L.	25F284	1
	INCLUDES ITEM 52		
	PIN HEAD BOLT	20H1581D16	2
	LOCKWASHER	3615V015	2
	HEX NUT	2007V008	2
52	BEARING SUPPORT CAP NOT SHOWN	B1-25F284	1
53	GEAR CASE CAP	14A59	1
	W/ PIPE PLUG	2423V007	2
	CAP SCREW 3/4 X 3/4 IN		1
	LOCKWASHER	3615V015	1
	CAP SCREW	0626V025	10
	LOCKWASHER	3616V008	10
54	BEARING CAP	25H817	1
55	BREATHER AIR MAZE	46Z4	1
56	INSPECTION COVER	14H461	1
	INCLUDES GASKET		
57	PAWL WITH COUNTERWEIGHT	6H245	1
58	PAWL PIN	19H1160	2
59	STOP BOLT	20H816	2
	W/ HEX LOW NUT	2022V009	2
60	PAWL PLUG	18H1919	4
61	PAWL PLUG SPRING	17H71	2
62	INSPECTION COVER	14H462	1
	INCLUDES GASKET		
63	PAWL	6H244	1
	DWG. 100A504		

ILLUSTRATION CHU-4

4 SHEAVE BOTTOM BLOCK

(1)

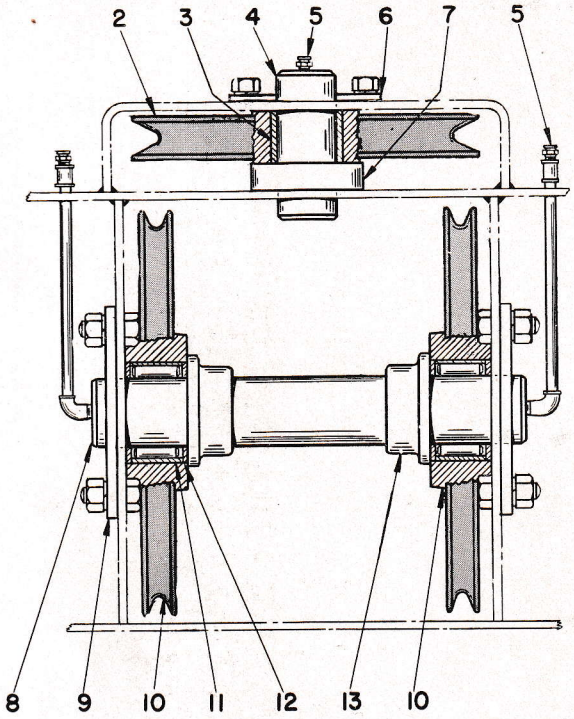

(14)

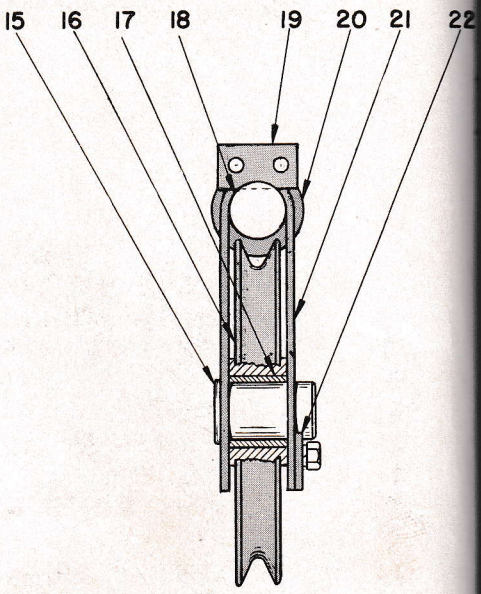

(23)

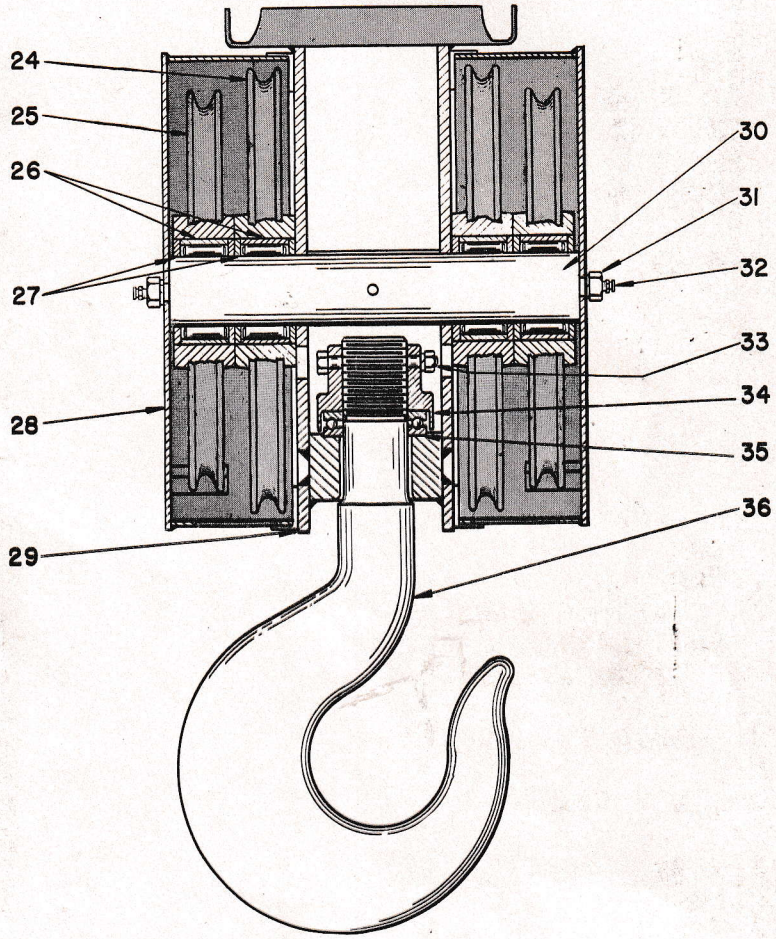

HARNISCHFEGER CORPORATION — FOUNDED IN 1884 QUALITY P&H SERVICE BY P&H — MILWAUKEE 46, WISCONSIN

ILLUSTRATION CHU-4-4

AUX. HOIST

20 21 22

4 SHEAVE SLEEVE BEARING BOTTOM BLOCK

REF. NO.	DESCRIPTION	PART NUMBER	AMOUNT REQUIRED
	CRANE 12362-3		
1	UPPER BLOCK ASSEMBLY		1
	INCLUDES ITEMS 2-13		
2	EQUALIZER SHEAVE W/ ITEM 3	7H162	1
3	BUSHING	5H113	1
4	SHEAVE PIN	19H994	1
5	NIPPLE INTERMEDIATE ALEMITE 1/4 IN	44Z1D6	3
6	KEEPER PLATE	18T21	1
	W/MACH. BOLTS & L.W.	3/4X2-1/4 IN.	2
7	NOT USED		
8	EQUALIZER SHEAVE PIN	19H1028	1
9	KEEPER PLATE	18T21	2
	W/ MACHINE BOLT 3/4 X 2-1/4	0609V195	4
	HEX NUT 3/4 IN	2007V008	4
	LOCKWASHER 3/4 IN	3615V015	4
10	GIRT SHEAVE	7H208	2
	W/ITEM 11		2
	ITEM 12		2
11	BUSHING	5H113	2
12	NOT USED		
13	SET COLLAR	18H180	2
	W/ SQ HD SET SCREW	0692V094	2
	REF 14 THRU 22 NOT USED		
23	BOTTOM BLOCK	L 32158-2	1
	INCLUDES 24-36 INCL.		
24	SHEAVE	7H155	2
	W/ITEM 26		2
25	SHEAVE	7H152	2
	W/ITEM 26		2
	ITEM 27		2
26	BUSHING	5H553	4
27	NOT USED		
28	SHEAVE GUARD	8F96	2
29	SIDE PLATE	8F98	1
	TRIP PLATE	908H15	1
30	SHEAVE PIN	19H980	1
31	SPECIAL CAP SCREW	20H734	2
	W/ LOCK WASHER 7/8 IN	3615V016	2
32	NIPPLE IND ALEMITE 1/8 IN	44Z1D5	3
33	MACH BOLT 1/2X6 1/2 IN	0610V129	1
	HEX NUT 1/2 IN	2045V005	1
	LOCK WASHER 1/2 IN	3615V011	1
34	HOOK NUT	20H732	1
35	BEARING S K F 921	25Z239D19	1
36	HOOK	8F95	1
	W/ITEM 33		1
	ITEM 34		1

HARNISCHFEGER CORPORATION

FOUNDED IN 1884 QUALITY P&H SERVICE BY PAWLING & HARNISCHFEGER

MILWAUKEE 46, WISCONSIN

C-U-4-4

REF. NO.	DESCRIPTION	PART NUMBER	AMOU REQUIR
	DWG-100E538		

IMPORTANT: READ "INSTRUCTIONS" WHEN ORDERING REPAIR PARTS

ILLUSTRATION C-29
8-PART REEVING SKETCH

AUX. HOIST

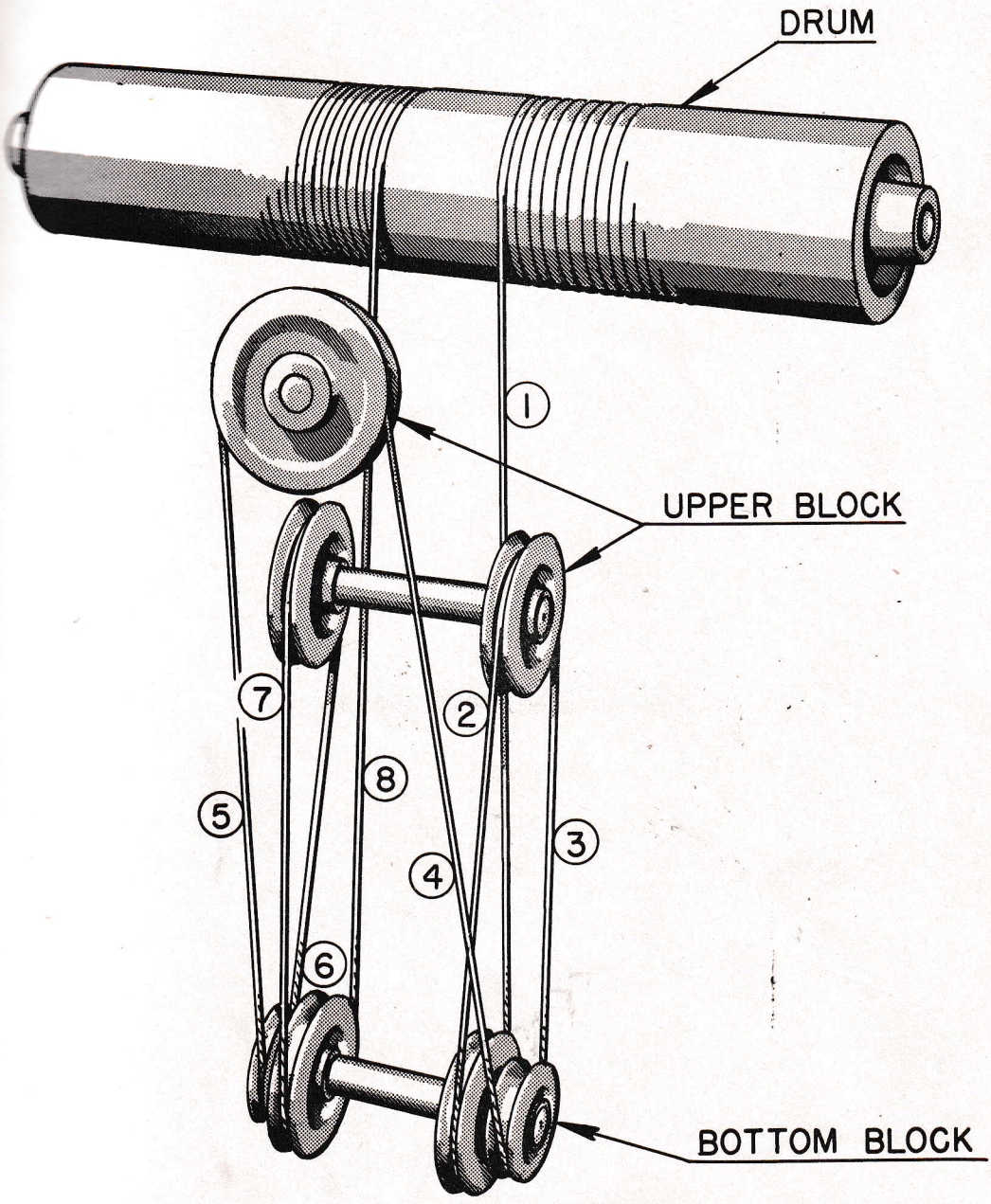

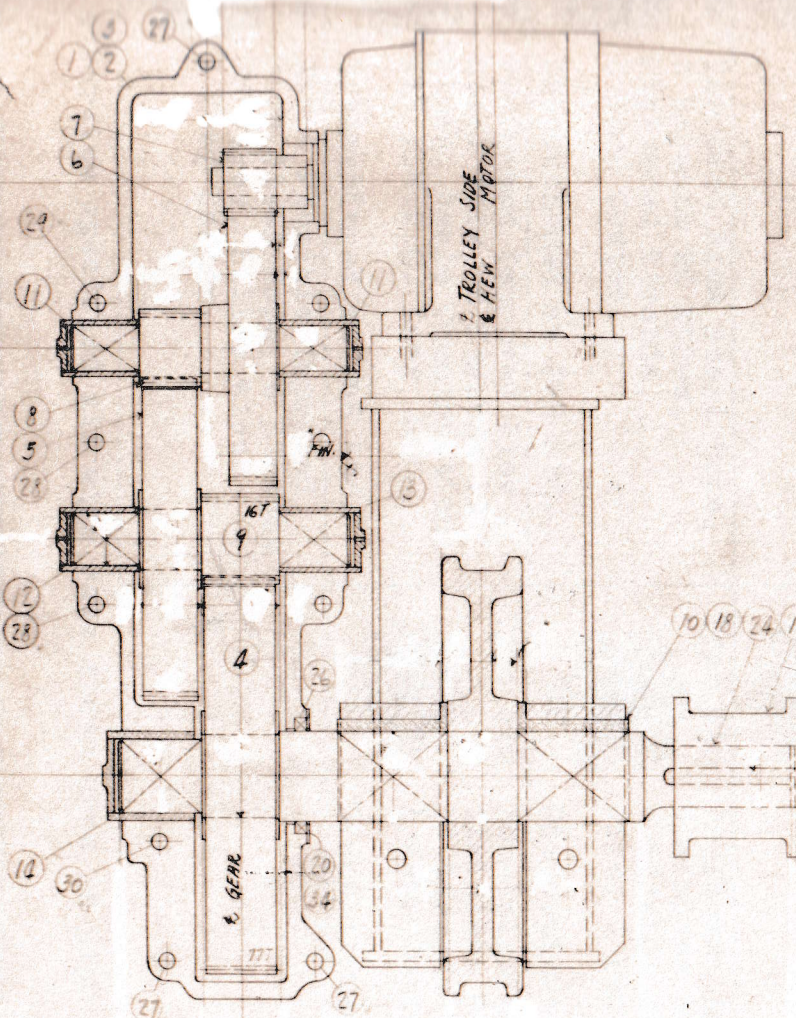

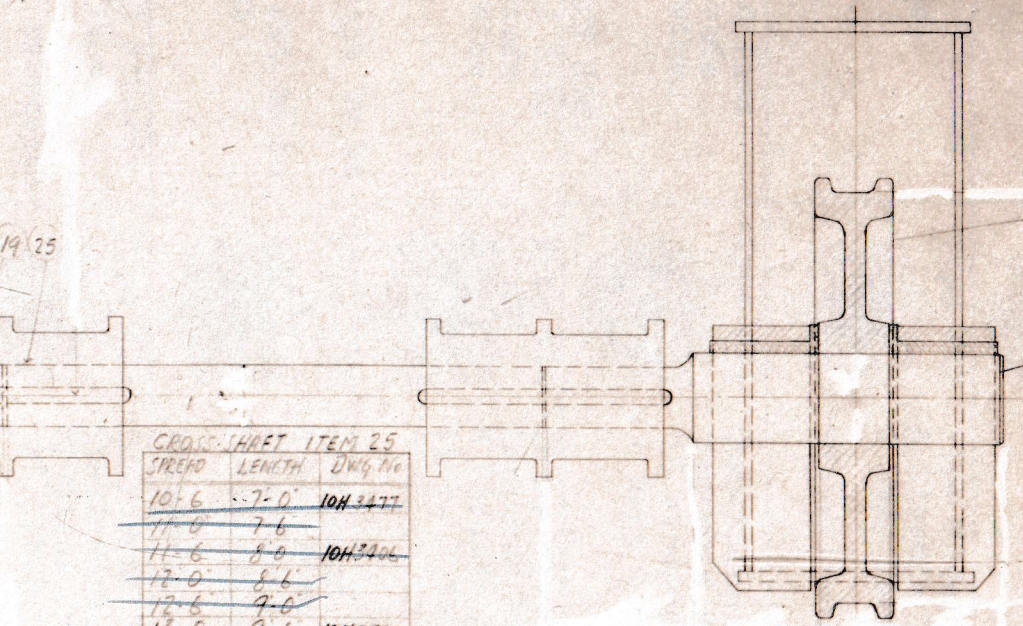

26		1	MOTOR OH Slow "1304		
27		3	1½-8" COUP B&LW		
28		4	1"x4" M.B.&L.W.		
29		2	1"x4½" M.B.&L.W.		
30		1	1⅛"x9½" M.B.&L.W.		
31		4	5/8"x1¾" SPEC. C.S.&L.W.	BOSS	
32		5	1⅜"x¾" DOWEL	ERAS	
33		5	¼" I.A. GREASE CUP		
34		6	⅜"x⅜" MACH. SCR & L.W.		
35		1	"14132 AIR MAZE BREATHER		

5	1H2346		INTER. PINION SHAFT		
6	1H1397		PINION SHAFT		
7	1H2347		MOTOR PINION		
8	1H2348		INTER. PINION SHAFT		
9	1H2349		TRUCK PINION SHAFT		
10	5H936 ½	4	MCB BUSHING	5H936 ½	#2.82
11	5H979-F1	2	BUSHING	9/1611	#2.82
12	5H980-F1	1	BUSHING	K51872-C	#2.82
13	5H981-F1	1	BUSHING	K51872-C	#2.82
14	5H982-F1	1	BUSHING	K52216-D	#2.82
15		1	¾ PIPE NIPPLE	2" Lg.	
16		2	¾" PIPE PLUG		
17		1	¾" PIPE TEE		
18	26F53	8	MCB BOX	K52609A-1	C.I.
19	18H2824	2	COUPLING	12/920 A1	C.I.
20	18H2576	1	SEAL RETAINER	⅛"x9½" dia	#37

CROSS SHAFT ITEM 25

SPREAD	LENGTH	DWG. No.
~~10'-6"~~	~~7'-0"~~	~~10H3477~~
~~11'-6"~~	~~7'-6"~~	
~~11'-6"~~	~~8'-0"~~	~~10H3406~~
~~12'-0"~~	~~8'-6"~~	
~~12'-6"~~	~~9'-0"~~	
13'-0"	9'-6"	10H3598
~~13'-6"~~	~~10'-0"~~	~~10H2822~~
14'-0"	10'-6"	10H4294

13'-0" SPREAD

~~14'-6"~~	~~11'-0"~~	~~10H3461~~

TRUCK WHEEL ITEM 21

RAIL	C.I.	ROLLS T.S.G.P.
100#	13H886	13H865

CR# 10758 & 10750

HARNISCHFEGER CORPORATION
MILWAUKEE, WIS.

TROLLEY DRIVE
FOR 150-TON TROLLEY

Dwg. No. 100E642

ALL MACHINE DIMENSIONS TO BE HELD TO ± UNLESS OTHERWISE SPECIFIED

Manila Rope, 3 Strands.

Iron Tiller Rope.
6 Strands 42 Wires,
7 Hemp Centers.

Preformed Improved Plow Steel Rope, 6 Strands 19 Wires, Filler Wire, 1 Hemp Center.

Discontinued as P&H Std.

Preformed Improved Plow Steel Rope, 6 Strands 19 Wires, Filler Wire, 7 x 7 I.W.R.C.

#4A Same as above except to be Lang Lay.

#4B Same as above except to be Left Lay, Lang Lay.

Plow Steel Rope, 6 Strands 19 Wires, Filler Wire, 1 Hemp Center.
(Used for loading purposes)

Improved Plow Steel Rope, 6 Strands 25 Wires, Flattened Strands, 1 Hemp Center.

Discontinued as P&H Std.

Preformed Improved Plow Steel Rope, 6 Strands 19 Wires, Seale Construction, 7x7 I.W.R.C. Lang Lay.

Discontinued as P&H Std.

Extra Flexible Improved Plow Steel Rope, 6 Strands 37 Wires, Filler Wire, 1 Hemp Center.

Type #9

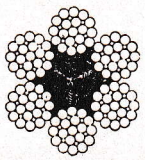

Improved Plow Steel Rope, 6 Strands 19 Wires, Filler Wire, 1 Hemp Center.

Type #10

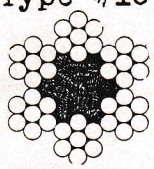

Plow Steel Haulage Rope, 6 Strands 7 Wires, 1 Hemp Center.

Discontinued as P&H Std.

Type #11

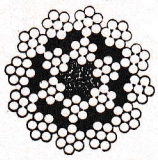

Non-Spinning Preformed Improved Plow Steel Rope, 18 Strands 7 Wires 1 Hemp Center

Type #12

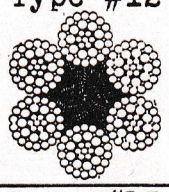

Extra Flexible Preformed Improved Plow Steel Rope. 6 Strands 37 Wires, Filler Wire, 1 Hemp Center.

Type #13

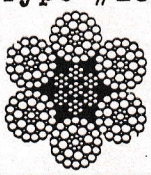

Preformed Improved Plow Steel Rope, 6 Strands 37 Wires or 6 Strands 41 Wires Filler Wire, 7x7 I.W.R.C.

Discontinued as P&H Std.

Type #14

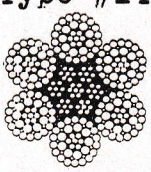

Preformed Improved Plow Steel Rope, 6 Strands 37 Wires, Filler Wire, 7x7 I.W.R.C. Lang Lay.

Type #15

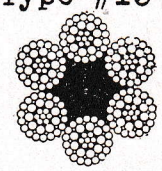

Preformed Extra Flexible Stainless Steel Rope, 6 Strands 37 Wires, Filler Wire, 1 Hemp Center.

Discontinued as P&H Std.

Type #16

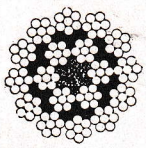

Non-Spinning Preformed Stainless Steel Rope, 18 Strands 7 Wires, 1 Hemp Center.

Discontinued as P&H Std.

[illegible] otherwise specified all wire rope shown here is Right Lay, Regular

ROPE - TYPES OF MANILA AND WIRE	DATE OF ISSUE 1-1-50	MS 132-1

TENTATIVE

ROPE - STRENGTH & WEIGHT OF WIRE AND MANILA

Rope Diameter		3/16	1/4	5/16	3/8	7/16	1/2	9/16	5/8	3/4	7/8	1	1-1/8	1-1/4	1-3/8	1-1/2	1-3/4	
Type #1	Brkg. Strgth. Tons	.225	.300	.500	.675	.875	1.33	1.73	2.20	2.70	3.85	4.50	6.00	6.75		9.25	13.3	
	Weight per Foot	.015	.020	.029	.041	.053	.075	.104	.133	.167	.225	.270	.360	.418		.600	.895	
Type #2	Brkg. Strgth. Tons	.350	.584	.908	1.30	1.77	2.30	2.90	3.57	5.10	6.60	8.60						
	Weight per Foot	.042	.070	.110	.160	.210	.280	.350	.430	.620	.840	1.10						
Type #3	Brkg. Strgth. Tons		2.74	4.26	6.10	8.27	10.7	13.5	16.7	23.8	32.2	41.8	52.6	64.6	77.7	92.0	124.	
	Weight per Foot		.100	.160	.230	.310	.400	.510	.630	.900	1.23	1.60	2.03	2.50	3.03	3.60	4.90	
Types #4 #4A #4B	Brkg. Strgth. Tons		2.94	4.59	6.56	8.89	11.5	14.5	18.0	25.6	34.6	44.9	56.5	69.4	83.5	98.9	133.	
	Weight per Foot		.110	.176	.253	.343	.440	.561	.693	.990	1.35	1.76	2.23	2.75	3.33	3.96	5.39	
Type #5	Brkg. Strgth. Tons		2.39	3.71	5.31	7.19	9.35	11.8	14.5	20.7	28.0	36.4	45.7	56.2	67.5	80.0	108.	
	Weight per Foot		.100	.160	.230	.310	.400	.510	.630	.900	1.23	1.60	2.03	2.50	3.03	3.60	4.90	
Type #6	Brkg. Strgth. Tons				6.71		11.8	14.9	18.3	26.2	35.4	46.0	57.9	71.0	85.5	101.	136.	
	Weight per Foot				.250		.450	.570	.700	1.01	1.39	1.80	2.28	2.81	3.40	4.05	5.51	
Type #7	Brkg. Strgth. Tons		2.94	4.59	6.56	8.89	11.5	14.5	18.0	25.6	34.6	44.9	56.5	69.4	83.5	98.9	133.	
	Weight per Foot		.110	.176	.253	.343	.440	.561	.693	.990	1.35	1.76	2.23	2.75	3.33	3.96	5.39	
Type #8	Brkg. Strgth. Tons		2.59	4.03	5.77	7.82	10.2	12.9	15.8	22.6	30.6	39.8	50.1	61.5	74.1	87.9	119.	
	Weight per Foot		.100	.160	.220	.300	.390	.490	.610	.870	1.19	1.55	1.96	2.42	2.93	3.49	4.75	
Type #9	Brkg. Strgth. Tons		2.74	4.26	6.10	8.27	10.7	13.5	16.7	23.8	32.2	41.8	52.6	64.6	77.7	92.0	124.	
	Weight per Foot		.100	.160	.230	.310	.400	.510	.630	.900	1.23	1.60	2.03	2.50	3.03	3.60	4.90	
Type #10	Brkg. Strgth. Tons		2.30	3.56	5.10	6.90	8.96	11.3	13.9	19.8	26.7	34.5	43.3	53.0	63.6	75.0		
	Weight per Foot		.094	.150	.210	.290	.380	.480	.590	.840	1.15	1.50	1.90	2.34	2.84	3.38		
Type #11	Brkg. Strgth. Tons		2.70	4.20	5.59	7.58	9.85	12.4	15.3	21.8	29.5	38.3	48.2	59.2	71.3	84.4	114.	
	Weight per Foot		.094	.150	.240	.330	.430	.550	.680	.970	1.32	1.73	2.19	2.70	3.27	3.89	5.30	
Type #12	Brkg. Strgth. Tons		2.59	4.03	5.77	7.82	10.2	12.9	15.8	22.6	30.6	39.8	50.1	61.5	74.1	87.9	119.	
	Weight per Foot		.100	.160	.220	.300	.390	.490	.610	.870	1.19	1.55	1.96	2.42	2.93	3.49	4.75	
Type #13	Brkg. Strgth. Tons		2.78	4.33	6.20	8.41	11.0	13.9	17.0	24.3	32.9	42.8	53.9	66.1	79.7	94.5	128.	
	Weight per Foot		.110	.176	.242	.330	.429	.539	.671	.957	1.31	1.71	2.16	2.66	3.22	3.84	5.23	
Type #14	Brkg. Strgth. Tons		2.78	4.33	6.20	8.41	11.0	13.9	17.0	24.3	32.9	42.8	53.9	66.1	79.7	94.5	128.	
	Weight per Foot		.110	.176	.242	.330	.429	.539	.671	.957	1.31	1.71	2.16	2.66	3.22	3.84	5.23	
Type #15	Brkg. Strgth. Tons		2.50	3.80	5.50	7.50	9.70	12.4	15.3	21.6	29.4	38.2	48.0	58.9	71.0	84.2		
	Weight per Foot		.100	.150	.220	.300	.390	.490	.610	.870	1.19	1.55	1.96	2.42	2.93	3.49		
Type #16	Brkg. Strgth. Tons				5.30	7.20	9.40	11.9	14.7	20.9	28.3	36.7	46.2	56.7	68.3	80.9		
	Weight per Foot				.240	.330	.430	.550	.680	.970	1.32	1.73	2.19	2.70	3.27	3.89		

DATE OF ISSUE 1-1-50

TENTATIVE

MS 132-2

ILLUSTRATION C B D-1

BRIDGE CROSS SHAFTING

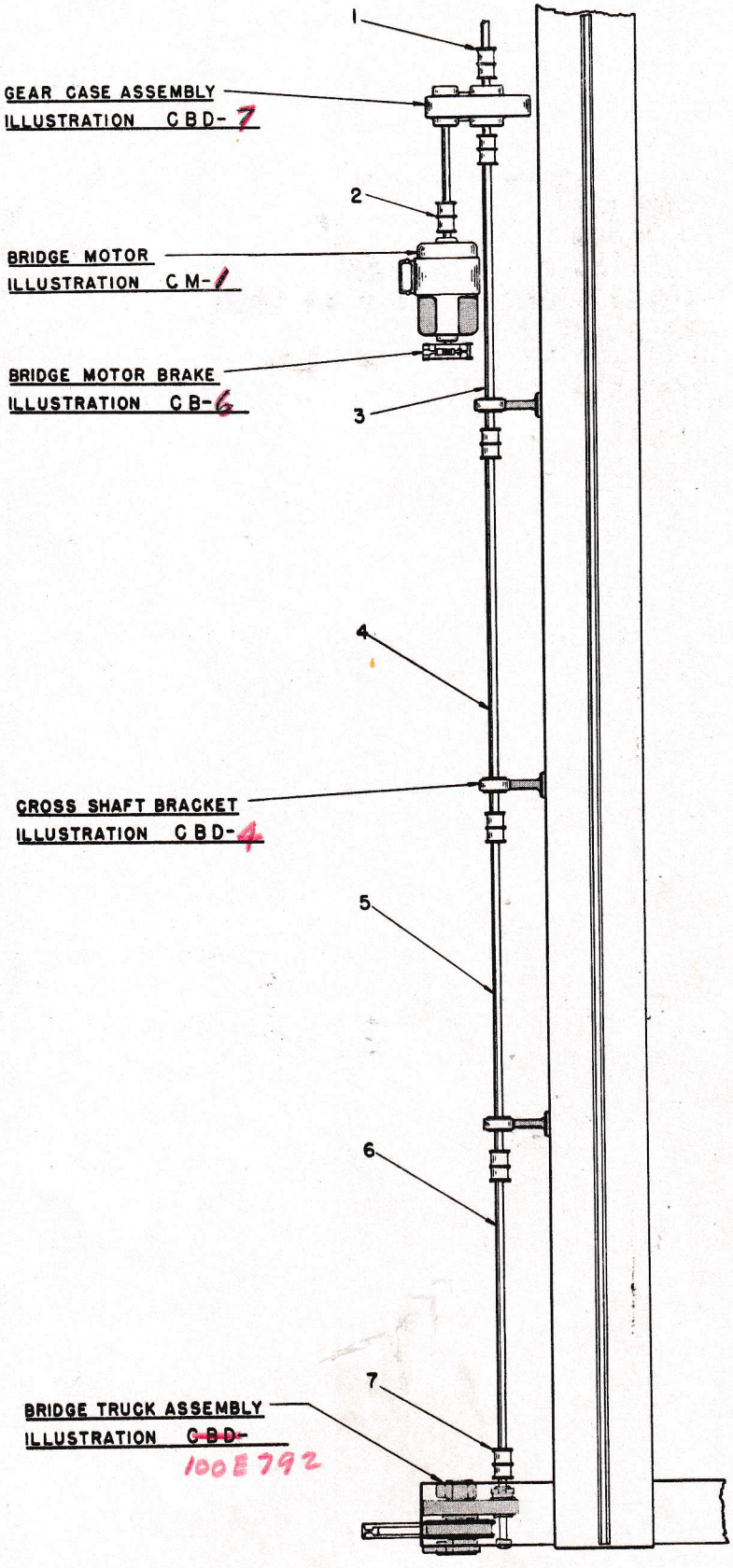

ILLUSTRATION CBD-1-1

BRIDGE CROSS SHAFTING

REF NO.	DESCRIPTION	PART NUMBER	AMOUNT REQUIRED
	CRANE 12362-3		
1	SPLIT COUPLING	L 33070	4
2	SPLIT COUPLING	18F298-C1-F1	1
3	CROSS SHAFT 13 FT 6 IN LONG	2-28E3162	1
	CROSS SHAFT 10 FT 0 IN LONG	3-28E3162	1
	REF 4 AND 5 NOT USED		
6	CROSS SHAFT 19 FT 3-7/8 IN LONG	1-28E3162	2
7	SPLIT COUPLING	L 33070	2

ILLUSTRATION CBD-7

HR-TRIPLE REDUCTION BRIDGE DRIVE GEAR CASE

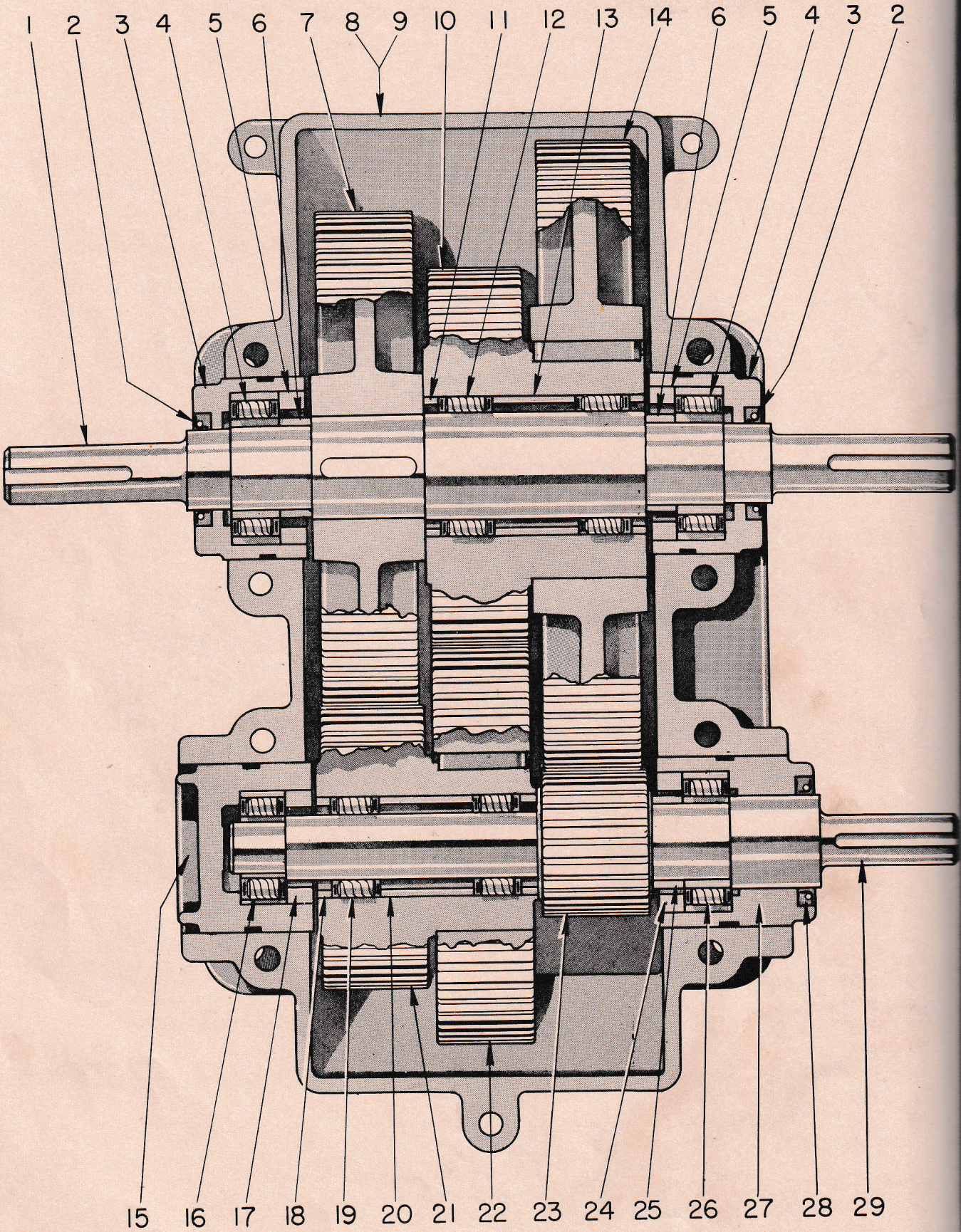

HARNISCHFEGER CORPORATION — FOUNDED IN 1884 — QUALITY P&H SERVICE — BY PAWLING & HARNISCHFEGER — MILWAUKEE 46, WISCONSIN

ILLUSTRATION CRD-7-4

TRIPLE REDUCTION SLEEVE BEARING DRIVE GEAR CASE

REF. NO.	DESCRIPTION	PART NUMBER	AMOUNT REQUIRED
	CRANE 12362-3		
1	GEAR CASE COUPLING SHAFT	10F900	1
	W/ S F KEY	20H1447D15	N 1
2	NOT USED		
3	NOT USED		
4	BUSHING	10-42660	2
5	NOT USED		
6	NOT USED		
7	TRUCK WHEEL GEAR	1F952	1
8	GEAR CASE UPPER CAP	8-42660	1
	W/ INSPECTION COVER	L 29076	1
	THUMB SCREWS	20H1687D10	2
	GEAR CASE CENTER PIECE	7-42660	1
9	GEAR CASE LOWER CAP	9-42660	1
	ADD THE FOLLOWING WHEN COMPLETE GEAR CASE IS REQUIRED		
	ITEM 4		2
	ITEM 16		1
	ITEM 26		1
	MACHINE BOLT 3/4 IN X 4-1/4 IN	0609V	4
	LOCKWASHER 3/4 IN	3615V015	4
	HEX NUT 3/4 IN	2007V008	4
	COUPLING BOLT 7/8 X 7-1/2 IN	20H1595D17	4
	COUPLING BOLT 7/8 X 6-1/2	20H1595D16	4
	LOCKWASHER 7/8 IN	3615V016	8
	HEX NUT 7/8 IN	2007V009	8
	DOWEL BRASS	19H1951D15	8
	PIPE PLUT 3/4 IN	2423V005	1
10	INTERMEDIATE PINION	1F953	1
	W/BUSHING REF.NO.12		1
	S F KEY	20H1447D10	1
11	NOT USED		
12	BUSHING	5T344	1
13	NOT USED		
14	MOTOR GEAR	1F1505	1
15	NOT USED		
16	BUSHING	11-42660	1
17	NOT USED		
18	NOT USED		
19	BUSHING	5H891	1
20	NOT USED		
21	TRUCK WHEEL PINION	1H2130	1
	W/BUSHING REF.NO.19		1
	W/ S F KEY 3/4 IN X 1/2 IN 3-11/16 IN		1
22	INTERMEDIATE GEAR	1F954	1
23	MOTOR PINION	1H2815	1
24	NOT USED		

HARNISCHFEGER CORPORATION — MILWAUKEE 46, WISCONSIN

FOUNDED IN 1884 QUALITY P&H SERVICE BY P&H

7-4

REF. NO.	DESCRIPTION	PART NUMBER	AMOUNT REQUIRED
25	NOT USED		
26	BUSHING	11-42660	1
27	NOT USED		
28	NOT USED		
29	MOTOR COUPLING SHAFT	10H3424	1
	W/ S F KEY	20H1426D12	1

IMPORTANT: READ "INSTRUCTIONS" WHEN ORDERING REPAIR PARTS

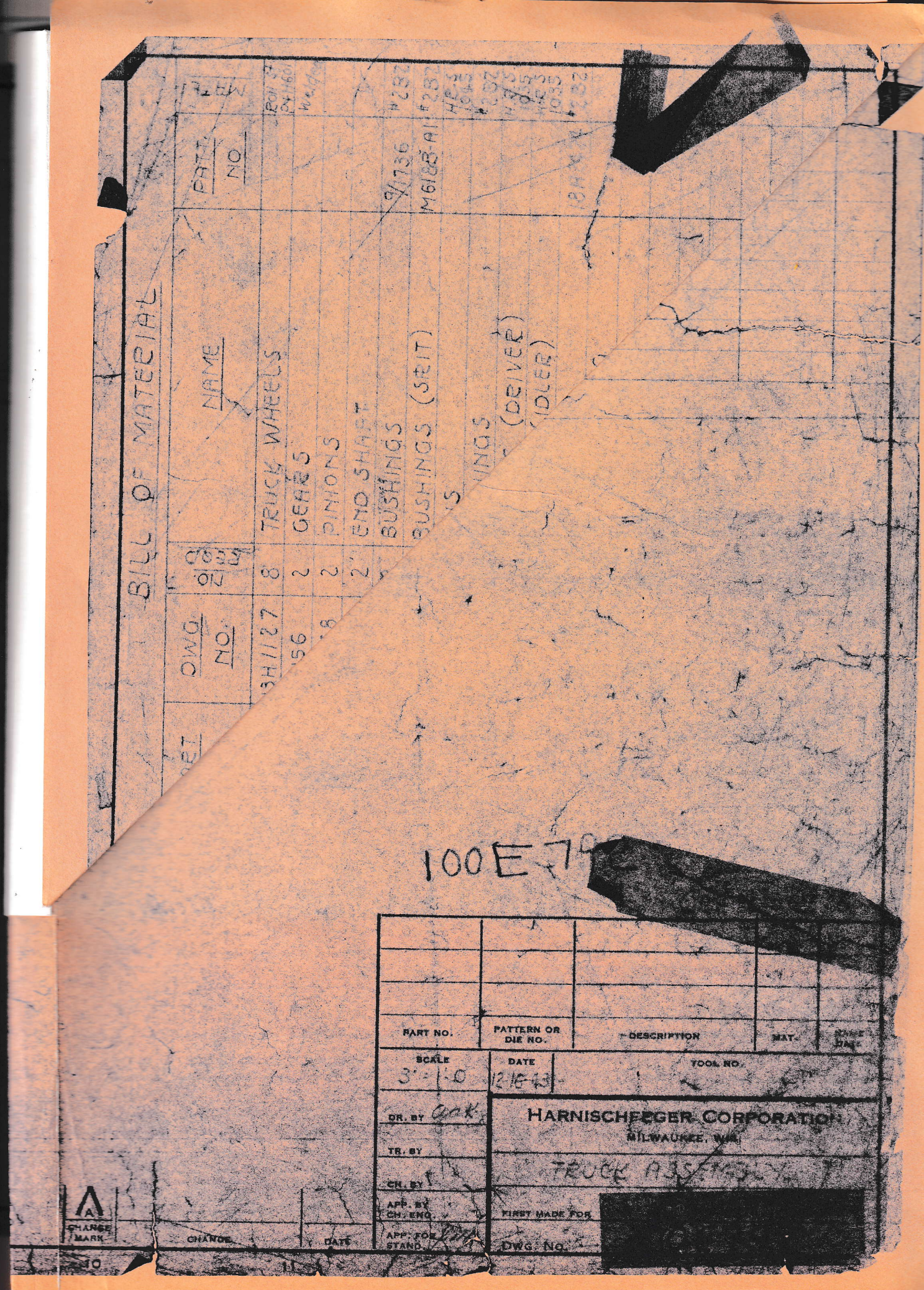
BILL OF MATERIAL
NAME
PATT. NO.
DWG. NO.
8 TRUCK WHEELS
2 GEARS
2 PINIONS
2 END SHAFT
BUSHINGS
BUSHINGS (SET)
(DRIVER)
(IDLER)
100E7
PART NO.
PATTERN OR DIE NO.
DESCRIPTION
MAT.
SCALE 3"=1'-0
DATE 12-16-43
TOOL NO.
DR. BY GAK
TR. BY
CK. BY
APP. BY CH. ENG.
APP. FOR STAND.
HARNISCHFEGER CORPORATION
MILWAUKEE, WIS.
TRUCK ASS'Y
FIRST MADE FOR
DWG. NO.
A
CHANGE MARK
CHANGE
DATE

ILLUSTRATION CBD-4

CROSS SHAFT BRACKET

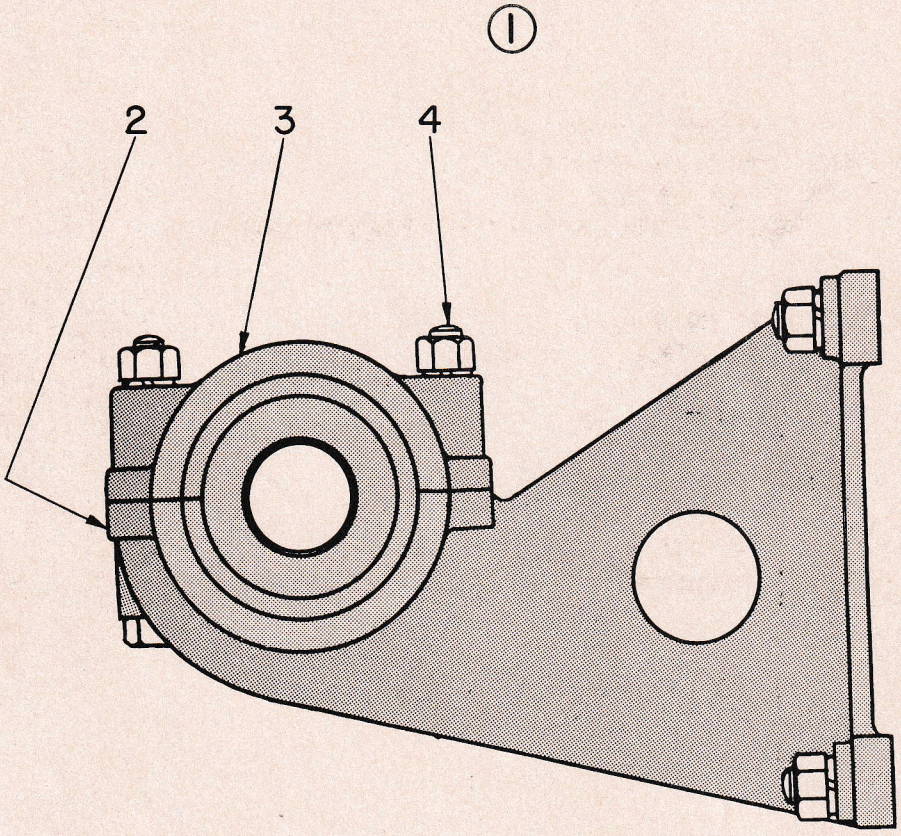

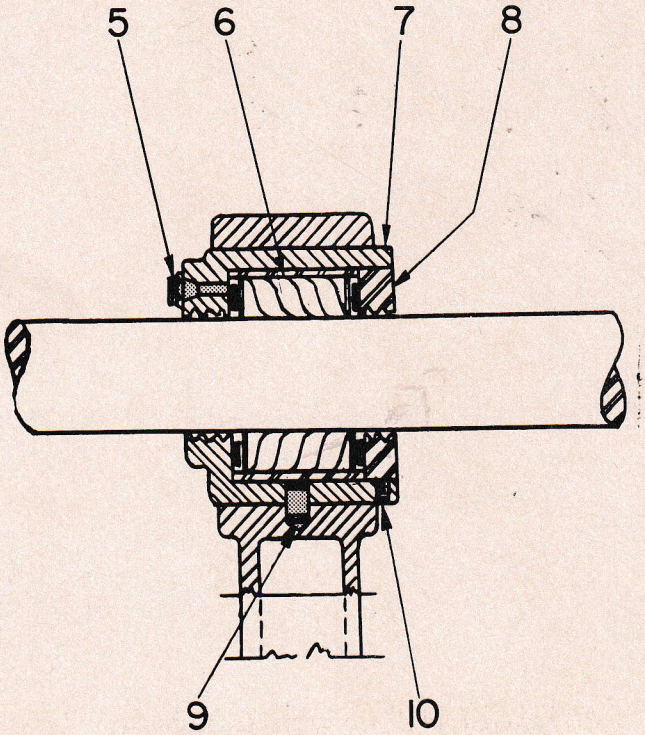

ILLUSTRATION CRD-4-1

[illegible] SHAFT BRACKET

[illegible]	DESCRIPTION	PART NUMBER	AMOUNT REQUIRED
	CRANE 12362-3		
[illegible]	[illegible] SHAFT BRACKET COMPLETE	L 4871	4 -
	INCLUDES 2-10 INCL.		
	FOLLOWING AMOUNTS ARE FOR ONE BRACKET ONLY		
2	[illegible]RACKET	8-20927	1 -
3	CAP	11-20927	1 -
4	[illegible]CHINE BOLT 1 IN 7-3/4 IN	0609V290	1 -
	PIN HEAD BOLT 1 IN 9 IN	20H1583D12	1 -
	HEX NUT 1 IN	2007V010	2 -
	SLOTTED NUT 1 IN	2029V010	2 -
	LOCKWASHER 1 IN	3618V017	2 -
5	[illegible]REASE CUP NO 2		1 -
6	[illegible]USHING	5H1201	1 -
	REF 7 AND 8 NOT USED		
9	DOWEL PIN	19H1951D15	1
	NOT USED		
	[illegible]MS 100F155		

ILLUSTRATION CM-1

HEW SLIP RING MOTOR

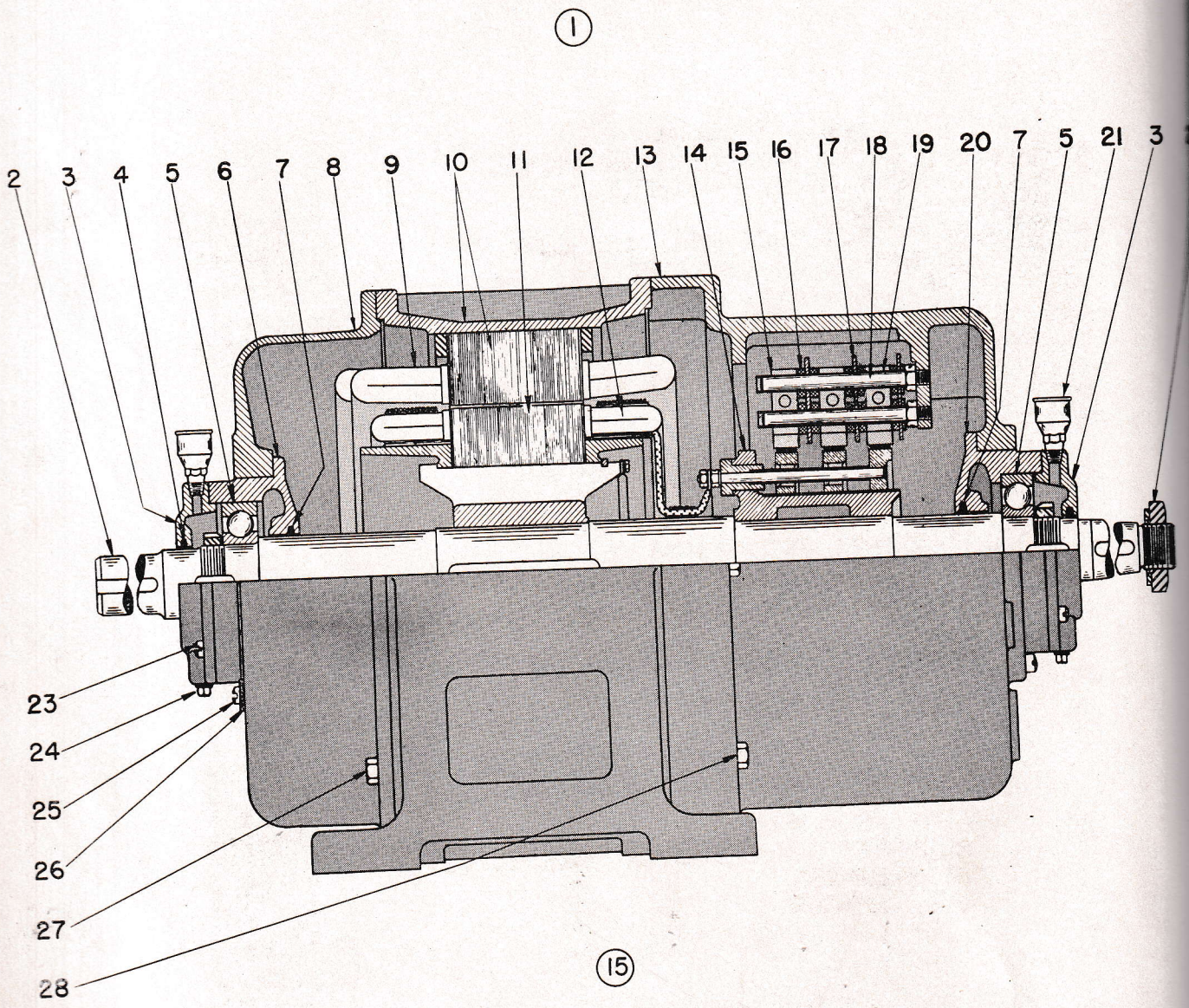

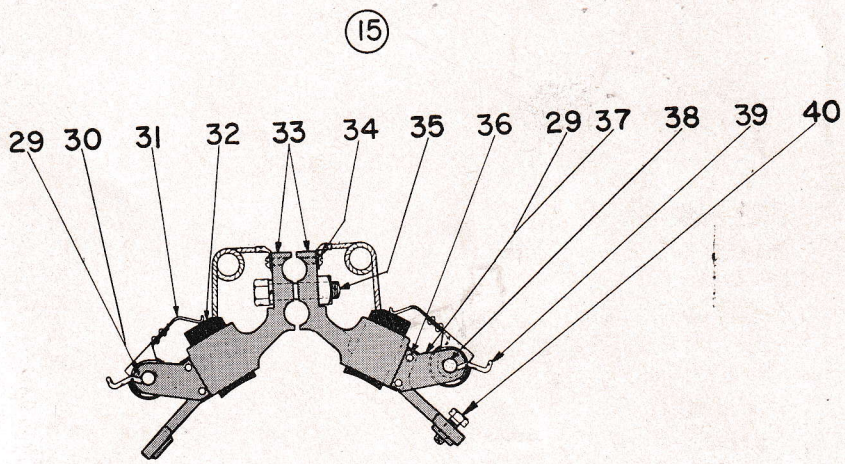

ILLUSTRATION CM-1-35

[illegible] 504 BALL BEARING MOTOR

MAIN HOIST

	DESCRIPTION	PART NUMBER	AMOUNT REQUIRED
	CRANE 12362-3		
1	HEw 504 ENCLOSED BALL BEARING MOTOR 50 HP 3 PHASE 50 CYCLE 380 VOLT	L 119093-1	1 -
2	ROTOR SHAFT INCLUDES KEYS AND LOCK NUTS	510F566F1	1
3	FRONT AND REAR CAPSULE COVER	572F58	2
4	FELT STRIP 1/4X3/8X11 1/4 IN		2
5	BALL BEARING S K F 6317	25T819D15	2
6	REAR BEARING CAPSULE	572F105	1
7	FELT STRIP 11/32X1/2X13 3/8 IN		2
8	REAR HEAD	572E496	1
9	1 SET STATOR COILS	L 95852-1	72 -
	W/ 1 SET SLOT INSULATION TO SUIT		1 -
10	STATOR COMPLETE INCLUDING FRAME LAMINATIONS COILS AND INSULATION	L 118251-1	1 -
	W/ ITEMS 41 42 43 AND 44		
11	ROTOR COMPLETE INCLUDING SHAFT SPIDER LAMINATIONS COILS AND SLIP RING UNIT	L 93375-1	1 -
12	1 SET ROTOR COILS	L 96598-1	1 8 -
	W/ 1 SET SLOT INSULATION	L 101372	1 -
13	FRONT HEAD	572A30	1
	W/ INSPECTION COVER	514F305	2
	COVER GASKET	520H286	2
	THUMB SCREW	20H1687D9	8
14	SLIP RING UNIT	L 97453	1
15	BRUSH HOLDER ASSEMBLY INCLUDES 29-31 AND 33 THRU 40 INCL	L 97605-1	3
	WITHOUT BRUSHES		
16	BRUSH HOLDER SPACER	577H219	12
17	BRUSH HOLDER SEPARATOR	577H190	3
18	BRUSH HOLDER STUD	520H216	2
	W/ HEX NUT 1/2 IN	2049V005	2
19	STUD INSULATOR	577H368	2
20	FRONT BEARING CAPSULE	572F56	1
21	GREASE CUPS EMPRESS STYLE 200 NO-1	44Z163D4	2
22	LOCK NUT	20H60	1
	W/ LOCKWASHER 2 3/4 IN	18H3910D8	1
23	FILL HD MACH SCREW	0636V131	8
24	PIPE PLUG 1/4 IN	2423V002	2
25	FILL HD MACH SCREW 7/16X2 1/4		6
26	COUNTERSUNK PIPE PLUG 3/4 IN	2421V005	4
27	CAPSCREW 5/8X1 3/4 IN	0626V114	4
	LOCKWASHER	3615V013	4
28	CAP SCREW 5/8X4 1/2 IN	0626V124	8
	LOCKWASHER	3615V013	8
29	NOT USED		
30	L H PRESSURE PLATE	73F4	3

IMPORTANT: READ "INSTRUCTIONS" WHEN ORDERING REPAIR PARTS

DESCRIPTION	PART NUMBER	AMOUNT REQUIRED
PRESSURE BAR FINGER	573H184	6
w/ SPRING	17H10	6
RD HD COPPER RIVET 1/8X3/16 IN	2514V020	12
BRUSHES	73F123D20	6
BRUSH HOLDER	573E19	6
RD HD MACH SCREW 1/4X3/8 IN	0860V107	6
CAPSCREW 1/2X2 1/2 IN	0626V079	3
w/ NUT 1/2 IN	2045V005	3
LOCKWASHERS 1/2 IN	3615V011	3
RD HD MACH SCREW	0860V107	12
LOCKWASHERS	3616V007	12
R H PRESSURE PLATE	73F5	3
FULCRUM PIN	573H185	6
w/ COTTER PIN 1/16X3/4 IN	2201V005	6
ADJUSTING PIN	73H3	6
CAPSCREW 3/8X3/4 IN	0826V039	3
TERMINAL BOX NOT SHOWN	514E61	1
w/ RD HD MACH SCREW	0660V146	4
LOCKWASHER	3616V009	4
TERMINAL BOX COVER NOT SHOWN	514E62	1
w/ RD HD MACH SCREW	0660V116	4
NUT	2045V001	4
TERMINAL BOX GASKET	520H236	1
TERMINAL BOX COVER GASKET	520H235	1

HARNISCHFEGER CORPORATION — MILWAUKEE 46, WISCONSIN

ILLUSTRATION CM-1-28

HEW 445 BALL BEARING MOTOR

AUX. HOIST

REF NO.	DESCRIPTION	PART NUMBER	AMOUNT REQUIRED
	CRANE 12362-3		
1	HEW 445 ENCLOSED BALL BEARING MOTOR 40 HP 3 PHASE 50 CYCLE 380 VOLT	L 119092-1	1
2	ROTOR SHAFT	510F456F1	1
3	FRONT AND REAR CAPSULE COVER	572F55	2
4	FELT STRIP 3/16X1/4X9-1/32 IN		2
5	BALL BEARING S K F 6314	25T819D13	2
6	REAR BEARING CAPSULE	572F101	1
7	FELT STRIP 7/32X11/32X11-5/16 IN		2
8	REAR HEAD	572E543	1
9	1 SET STATOR COILS	L 95206	72
	W/ 1 SET SL03 INSULATION TO SUIT		1
10	STATOR COMPLETE INCLUDING FRAME LAMINATIONS COILS AND INSULATION	L 118250-1	1
	W/ ITEMS 41 42 43 44		
11	ROTOR COMPLETE INCLUDING SHAFT SPIDER LAMINATIONS COILS AND INSULATIONS SLIP RING UNIT	L 93472	1
12	1 SET ROTOR COILS	L 96516-1	54
	W/ 1 SET SLOT INSULATION	L 101396-1	1
13	FRONT HEAD	572A29	1
	W/ INSPECTION COVER	514F304	2
	COVER GASKET	520H287	2
	THUMB SCREW 3/8X3/4 IN	20H1687D4	8
14	SLIP RING UNIT	L 97452	1
15	BRUSH HOLDER ASSEMBLY	L 97605-1	3
16	BRUSH HOLDER SPACER	577H219	10
17	BRUSH HOLDER SEPARATOR	577H194	3
18	BRUSH HOLDER STUD	520H216	2
	W/ HEX NUT 1/2 IN SAE	2049V005	2
19	STUD INSULATOR	577H187	2
20	FRONT BEARING CAPSULE	572F53	1
21	GREASE CUPS - EMPRESS STYLE 200 - 1	44Z163D4	2
22	LOCK NUT	20H59	1
	W/ LOCK WASHER 2 IN	18H3910D7	1
23	FILL HD MACH SCREW 3/8X1 IN	0636V131	8
24	PIPE PLUG 1/4 IN	2421V002	2
25	FILL HD MACH SCREW 7/16X2 IN		6
26	COUNTERSUNK PIPE PLUG 3/4 IN	2421V005	4
27	CAPSCREW 1/2X1-1/2 IN	0826V079	4
	LOCKWASHER 1/2 IN	3615V011	4
28	CAP SCREW 1/2X3-1/2 IN	0626V087	8
	LOCKWASHER 1/2 IN	3615V011	8
29	NOT USED		

IMPORTANT: READ "INSTRUCTIONS" WHEN ORDERING REPAIR PARTS

DESCRIPTION	PART NUMBER	AMOUNT REQUIRED
R H PRESSURE PLATE	73F3	3
PRESSURE BAR FINGER	573H184	6
W/ SPRING	17H10	6
RD HD COPPER RIVET 1/8X3/16 IN	2514V020	12
BRUSHES	73F123D20	6
BRUSH HOLDER	573E19	6
RD HD MACH SCREW 1/4X3/8 IN	0660V107	6
CAP SCREW 1/2X2-1/2 IN	0826V083	3
W/ NUT 1/2 IN	2045V005	3
LOCKWASHER 1/2 IN	3615V011	3
RD HD MACH SCREW 1/4X3/8 IN	0860V107	12
L H PRESSURE PLATE	73F4	3
FULCRUM PIN	573H185	6
W/ COTTER PIN 1/16X3/4 IN	2201V005	6
ADJUSTING PIN	73H3	6
CAP SCREW 3/8X3/4 IN	0809V053	3
TERMINAL BOX	514E59	1
W/ RD HD MACH SCREW 3/8X1 IN	0660V146	4
TERMINAL BOX COVER	514E62	1
RD HD MACH SCREW 1/4X1-1/4 IN	0660V116	2
HEX NUT 1/4 IN	2045V001	2
TERMINAL BOX GASKET	520H236	1
TERMINAL BOX COVER GASKET	520H235	1

HARNISCHFEGER CORPORATION — P&H QUALITY SERVICE — MILWAUKEE 46, WISCONSIN

ILLUSTRATION CM-1-6

NEW BALL BEARING SLIP RING MOTOR

TROLLEY

NO.	DESCRIPTION	PART NUMBER	AMOUNT REQUIRED
	CRANE 12362-3		
1	NEW 405 ENCLOSED BALL BEARING MOTOR 20 HP 3 PHASE 50 CYCLE 380 VOLT	L 119091-3	1 -
2	ROTOR SHAFT INCLUDES KEYS AND LOCK NUTS	510F782-F1 510F557F1	1 - 1
3	FRONT CAPSULE COVER REAR CAPSULE COVER	572F52 572E192	1 - 1 -
4	FELT STRIP 3/16X1/4X8-1/2 IN		2
5	BALL BEARING S K F 6313	25T819D12	1
6	REAR BEARING CAPSULE	572F76	1
7	FELT STRIP 7/32X11/32X10-1/2 IN		2
8	REAR HEAD	572E541	1
9	1 SET STATOR COILS	L 95851-1	72 -
	W/1 SET SLOT INSULATION	L.101447	1
10	STATOR COMPLETE INCLUDING FRAME, LAMINATIONS COILS AND INSULATION W/ITEMS 41,42,43 & 44	L 116249-1	1 -
11	ROTOR COMPLETE INCLUDING SHAFT, SPIDER, LAMINATIONS, COILS, SLIP RING UNIT	L 93401	1 -
12	1 SET ROTOR COILS	L 96475	48 -
	W/ 1 SET SLOT INSULATION	L 101586-1	1 -
13	FRONT HEAD	572E826	1
	W/INSPECTION COVER	514F303	2
	COVER GASKET	520H288	2
	THUMB SCREW	20H1687D9	8
14	SLIP RING UNIT	L.97491	1
15	BRUSH HOLDER ASSEMBLY WITHOUT BRUSHES INCLUDES 29-31, 33-40	L.97607-1	3
16	BRUSH HOLDER SPACER	577H219	12
17	BRUSH HOLDER SEPARATOR	577H198	3
18	BRUSH HOLDER STUD	520H217	2
	W/ HEX NUT 1/2 IN S A E	2049V005	2
19	STUD INSULATOR	577H189	2
20	FRONT BEARING CAPSULE	572F50	1
21	GREASE CUPS EXPRESS STYLE 200	#0	2
22	LOCK NUT	20H59	1
	W/ LOCKWASHER 2 IN	18H3910D7	1
23	FILL HD MACH SCREW 3/8X1 IN	0636V131	8
24	PIPE PLUG 1/4 IN	2423V002	2
25	FILL HD MACH SCREW 3/8X1 3/4 IN	0636V135	6
26	PIPE PLUG 3/4 IN	2421V005	4
27	CAPSCREW 1/2X1 1/4 IN	0826V078	4
	W/ LOCKWASHER 1/2 IN	3615V011	4
28	CAP SCREW 1/2X3 1/4	0626V086	8

IMPORTANT: READ "INSTRUCTIONS" WHEN ORDERING REPAIR PARTS

DESCRIPTION	PART NUMBER	AMOUNT REQUIRED
W/ LOCKWASHER 1/2 IN	3615V011	8
PLAIN PRESSURE PLATE	573H151	6
R.H. PRESSURE PLATE	573H150-R	3
PRESSURE BAR FINGER	573H183	6
W/SPRING	17H1	6
RD HD COPPER RIVET 3/32X3/16 IN	2514V001	12
CARBON BRUSH	73F123D19	6
BRUSH HOLDER	573F23	6
RD HD MACHINE SCREW #10-24X3/8 IN	0660V073	6
CAP SCREW 7-16X2 IN	0826V063	3
W/ SQ NUT 7/16 IN Z P		3
LOCKWASHER 7/16 IN	3615V010	3
RD HD COPPER RIVET 1/8X3/4 IN	2514V028	12
W/ COTTER PIN 1/16X5/8 IN	2201V004	6
L.H. PRESSURE PLATE	573H150-L	3
FULCRUM PIN	73H5	6
W/COTTER PIN	1/16X5/8 IN	6
ADJUSTING PIN	73H3	6
CAP SCREW 5/16X1/2 IN	0826V019	3
TERMINAL BOX NOT SHOWN	514E123	1
W/ RD HD MACH SCREW 1/4X3/4 IN	0660V112	4
LOCKWASHER 1/4	3616V007	4
TERMINAL BOX COVER NOT SHOWN	514E121	1
W/ RD HD MACH SCREW 1/4X1 IN	0660V114	2
LOCKWASHER 1/4 IN	3616V007	2
TERMINAL BOX GASKET	520H227	1
TERMINAL BOX COVER GASKET	520H283	1

HARNISCHFEGER CORPORATION — MILWAUKEE 46, WISCONSIN

FOUNDED IN 1884 — QUALITY P&H SERVICE — BY PAWLING & HARNISCHFEGER

ILLUSTRATION CM-1-20

BRIDGE

HEW BALL BEARING MOTOR

NO.	DESCRIPTION	PART NUMBER	AMOUNT REQUIRED
	CRANE 12362-3		
1	HEW 504 ENCLOSED BALL BEARING MOTOR		
	40 HP 3 PHASE 50 CYCLE 380 VOLT	L 119094-1	1 -
2	ROTOR SHAFT INCLUDES KEYS AND LOCK NUTS	510F566F1	1
3	FRONT AND REAR CAPSULE COVER	572F58	2
4	FELT STRIP 1/4X3/8X11 1/4 IN		2
5	BALL BEARING SKF 6317	25T819D15	2
6	REAR BEARING CAPSULE	572F105	1
7	FELT STRIP 11/32X1/2X13 3/8 IN		2
8	REAR HEAD	572E496	1
9	1 SET STATOR COILS	L 95853-1	72 -
	W/ 1 SET STLO INSULATION TO SUIT		1
10	STATOR COMPLETE INCLUDING FRAME		
	LAMINATIONS COILS AND INSULATION	L 118252-1	1 -
	W/ ITEMS 41 42 43 AND 44		
11	ROTOR COMPLETE INCLUDING SHAFT SPIDER		
	LAMINATIONS COILS AND SLIP RING UNIT	L 93347	1 -
12	1 SET ROTOR COILS	L 96468	96 -
	W/ 1 SET SLOT INSULATION	L 101373	1 -
13	FRONT HEAD	572A30	1
	W/ INSPECTION COVER	514F305	2
	COVER GASKET	520H286	2
	THUMB SCREW	20H1687D9	8
14	SLIP RING UNIT	L 97453	1
15	BRUSH HOLDER ASSEMBLY	L 97605-1	3
	INCLUDES 29-31 33-40		
	WITHOUT BRUSHES		
16	BRUSH HOLDER SPACER	577H219	12
17	BRUSH HOLDER SEPARATOR	577H190	3
18	BRUSH HOLDER STUD	520H216	2
	W/ HEX NUT 1/2 IN	2049V005	2
19	STUD INSULATOR	577H368	2
20	FRONT BEARING CAPSULE	572F56	1
21	GREASE CUPS EMPRESS STYLE 200 NO-1	44Z163D4	2
22	LOCK NUT	20H60	1
	W/ LOCKWASHER 2 3/4 IN	18H3910D8	1
23	FILL HD MACH SCREW	0636V131	8
24	PIPE PLUG	2423V002	2
25	FILL HD MACH SCREW 7/16-14X2 1/4 IN		6
26	COUNTERSUNK PIPE PLUG	2421V005	4
27	CAP SCREW	0626V114	4
	LOCKWASHER	3615V013	4
28	CAPSCREW	0626V124	8
	LOCKWASHER	3615V013	8
29	NOT USED		
30	L H PRESSURE PLATE	73F4	3
31	PRESSURE BAR FINGER	573H184	6

IMPORTANT: READ "INSTRUCTIONS" WHEN ORDERING REPAIR PARTS

REF NO.	DESCRIPTION	PART NUMBER	AMOUNT REQUIRED
	W/ SPRING	17H10	6
	RD HD COPPER RIVET 1/8X3/16 IN	2514V020	12
32	BRUSHES TYPE NCC-AY	573H148	6
	W/ PIGTAIL		
33	BRUSH HOLDER	573E19	6
34	RD HD MACH SCREW	0860V107	6
35	CAPSCREW	0626V011	3
	W/ SQ NUT 1/2 IN		3
	LOCKWASHERS 1/2 IN	3615V083	3
36	RD HD MACH SCREW	0860V107	12
	LOCKWASHER	3616V007	12
37	R H PRESSURE PLATE	73F5	3
38	FULCRUM PIN	573H185	6
	W/ COTTER PIN	2201V005	6
39	ADJUSTING PIN	73H3	6
40	CAP SCREW	0826V039	3
41	TERMINAL BOX NOT SHOWN	514E61	1
	W/ RD HD MACH SCREW	0660V146	4
	LOCKWASHER	3616V009	4
42	TERMINAL BOX COVER NOT SHOWN	514E62	1
	W/ RD HD MACH SCREW	0660V116	4
	NUT	2045V001	
43	TERMINAL BOX GASKET	520H236	1
44	TERMINAL BOX COVER GASKET	520H235	1

ILLUSTRATION CB-6

SOLENOID BRAKE

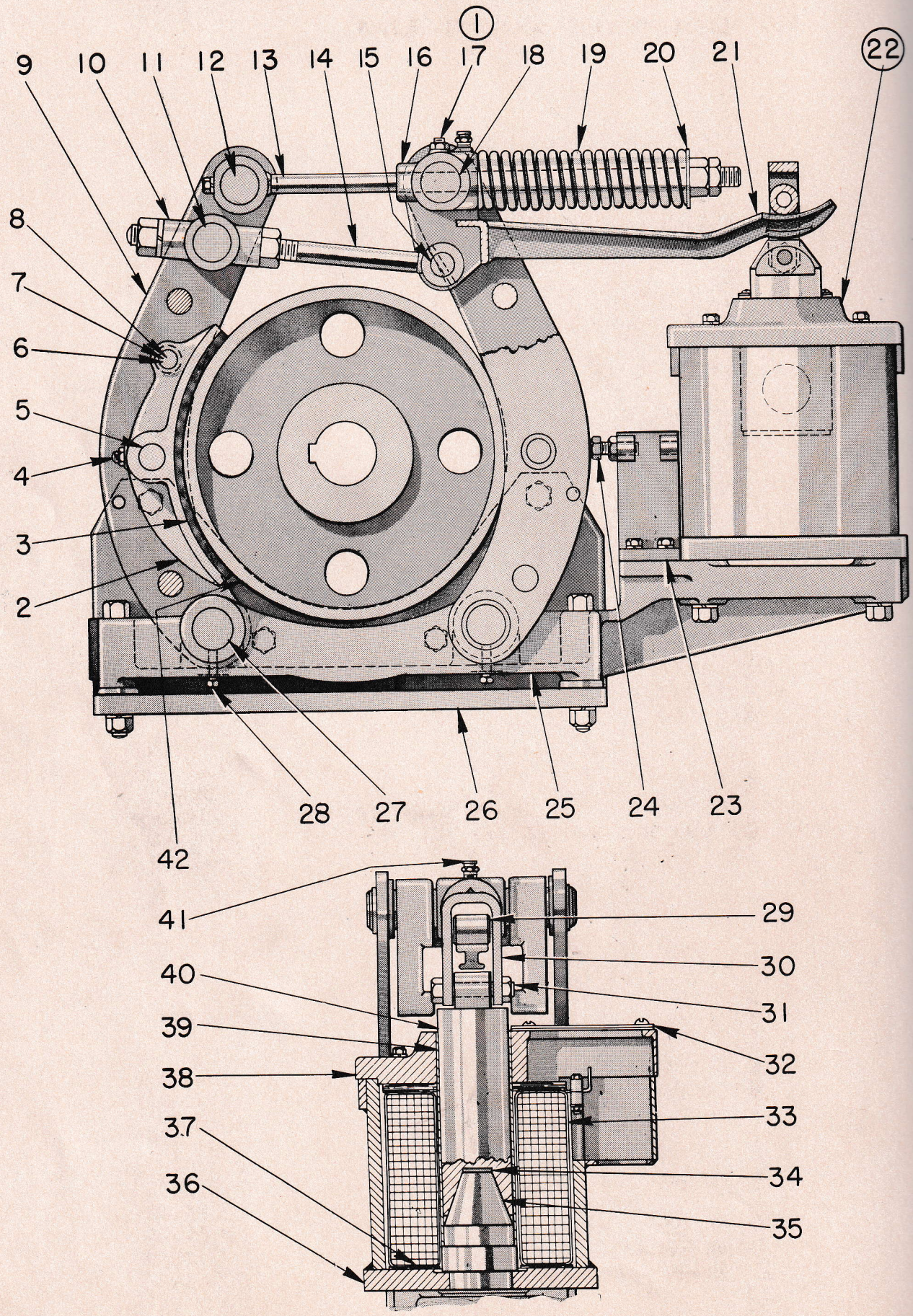

HARNISCHFEGER CORPORATION — MILWAUKEE 46, WISCONSIN

FOUNDED IN 1884 — QUALITY P&H SERVICE — BY PAWLING & HARNISCHFEGER

ILLUSTRATION CB-6-3

13SD600 FLOOR MOUNTED SOLENOID BRAKE

MAIN HOIST

REF. NO.	DESCRIPTION	PART NUMBER	AMOUNT REQUIRED
	CRANE 12362-3		
1	13SA600 FLOOR MOUNTED SOLENOID BRAKE WITHOUT ITEMS 26,33,42	L 51461-1	1 -
2	BRAKE SHOE INCLUDES LINING	L.915F31-1	2
3	BRAKE SHOE LINING GRADE R	15H183	2
	W/ FL HD RIVETS 5-3/4 IN	20H1658D3	16
	J.M. RIVET PLUGS	1/2 IN. DIA.X 3/16 IN.	16
4	ALLEN HD SET SCREW CUP POINT 3/8-16X1 IN	0682V063	2
	W/ HEX LOW NUT 3/8-16 IN	2061V003	2
5	BRAKE SHOE PIN	19H1062-C1	2
6	FRICTION PLUG	19H970	4
7	SPRING	17H327	2
8	NOT USED		
9	BRAKE JAW INCL 8 BUSHING	15E109F1-1-2	1 -
10	CROSS HEAD	15H254	1
11	PIN	19H1061-C1	1
12	PIN	19H1060C1	1
13	SPRING ROD & SEAT ASSEMBLY INCLUDES ITEM 16,19.20	L.46284	1
14	PUSH ROD ASSEMBLY INCLUDES ITEM 10	L.46285	1
15	PIN	19H1059C1	1
	W/PIN STL	3/16X1-11/16 IN	1
16	SPRING SEAT	15H255	1
17	ALLEN HD SET SCREW CUP POING 3/8-16X1 IN	0682V063	1
	W/ HEX LOW NUT 3/8-16 IN	2061V003	1
18	PIN	19H1061-C1	1
19	SPRING	17H114	1
20	SPRING WASHER	18H1690	1
21	LEVER INCLUDES BUSHING	L 46287-1	1 -
22	SOLENOID G E 215A INCLUDES ITEMS 29-32,36-40 INCL. SPECIFY VOLTAGE PHASE AND CYCLE		1 -
23	JAW STOP	15H274	1
24	CAP SCREW 1/2-20X1 1/4 IN	0626V078	1
	W/ HEX LOW NUT 1/2-20	2061V005	1
25	BASE	15E107	1
26	BRACKET	L 46283	1 -
27	PIN	19H1064-C1	2
28	SQ HD SET SCREW CUP POINT 3/8-16X1 IN	0682V063	2
29	ROLLER	15E256	1 -
	W/ CAP SCREW 5/8-18X3 IN	0626V119	1
	LOCKWASHER	3615V013	1
	HEX LOW NUT 5/8-18 IN	2061V007	1

IMPORTANT: READ "INSTRUCTIONS" WHEN ORDERING REPAIR PARTS

HARNISCHFEGER CORPORATION — MILWAUKEE 46, WISCONSIN

FOUNDED IN 1884 — QUALITY P&H SERVICE — BY P&W LING & HARNISCHFEGER

ILLUSTRATION CB-6-4

11SD300 FLOOR MOUNTED SOLENOID BRAKE

AUX. HOIST

REF. NO.	DESCRIPTION	PART NUMBER	AMOUNT REQUIRED
	CRANE 12362-3		
1	11SA300 FLOOR MOUNTED SOLENOID BRAKE WITHOUT ITEMS 26,33,42	L 51466	1 -
2	BRAKE SHOE INCLUDES LINING	L.46291-1	2
3	BRAKE SHOE LINING GRADE R	15F87	2
	W/ FL HD RIVETS 5X3/4 IN	20H1658D3	12
	J.M. RIVET PLUGS	1/2 IN. DIA.X 3/16 IN.	12
4	ALLEN HD SET SCREWCUP POINT 3/8-16X3/4	0682V061	2
	W/ HEX LOW NUT 3/8-16	2061V003	2
5	BRAKE SHOE PIN	19H1072	2
6	FRICTION PLUG	19H985	4
7	SPRING	137-K47211	2
8	NOT USED		
9	BRAKE JAW INCLUDES 8 BUSHINGS	L.46381-1	1
	BRAKE JAW INCLUDES 6 BUSHINGS	L.46381-2	1
10	CROSS HEAD	15H259	1
11	PIN	19H1071	1
12	PIN	19H1099	1
13	SPRING ROD	15F212	1
	W/ HEX NUT 1/2-13	2045V005	1
13V	HEX LOW NUT 1/2-13	2061V005	1
14	PUSH ROD	15H258	1
	W/ HEX NUT 1/2-13	2045V005	2
15	PIN	19H1070	1
	W/PIN STL	1/8X1-3/8 IN.	1
16	SPRING SEAT	15H270	1
17	ALLEN HD SET SCREW-CUP POINT 3/8-16X3/4	0682V061	1
	W/ HEX LOW NUT 3/8-16	2061V003	1
18	PIN	19H1071	1
19	SPRING	17H91	1
20	SPRING WASHER	18H1688	1
21	LEVER INCLUDES BUSHING	L 46311	1 -
22	SOLENOID G E		1 -
23	JAW STOP	15F243	1
24	CAP SCREW 1/2-20X1-1/2 IN	0626V079	1
	W/ HEX LOW NUT 1/2-20	2061V005	1
25	BASE	15E120	1
26	BRACKET	L 46306	1 -
27	PIN	19H1073	2
28	SQ HD SET SCREW-CUP POINT 3/8-16X1-3/4	0682V066	2
29	SEE REF NO 30		
30	LINK - ROLLER AND PIN	L 46310-2	1 -
31	CAP SCREW	0626V120	1 -
31	LOCKWASHER	3615V013	1 -

IMPORTANT: READ "INSTRUCTIONS" WHEN ORDERING REPAIR PARTS

REF. NO.	DESCRIPTION	PART NUMBER	AMO REQU
32	NOT USED		
	W/GASKET	20H915	1
	RD HD MACH SCREW 10-24X1/4 IN	0660V071	4
	LOCKWASHER NO-10		4
33	COIL SPECIFY VOLTAGE PHASE AND CYCLE		
34	NOT USED		
35	NOT USED		
36	PLATE	29H99	1
	SPRING	PC-435	4
37	CAP SCREW	20H600	4
	W/ SLOTTED NUTS		
	REF 38 THRU 40 NOT USED		
40	PLUNGER	81F23-C1	1
41	GREASE NIPPLE IND ALEMITE 1/8 IN	44Z1D5	1
	GITS OIL CUPS NOT SHOWN STYLE G	#501	2
42	BRAKE WHEEL	13F223	1

HARNISCHFEGER CORPORATION — FOUNDED IN 1884 QUALITY P&H SERVICE BY PAWLING & HARNISCHFEGER — MILWAUKEE 46, WISCONSIN

ILLUSTRATION CB-6-2

7SD80 FLOOR MOUNTED SOLENOID BRAKE

TROLLEY

REF. NO.	DESCRIPTION	PART NUMBER	AMOUNT REQUIRED
	CRANE 12362-3		
1	75A80 FLOOR MOUNTED SOLENOID BRAKE	L 51488-1	1 -
	WITHOUT ITEMS 26,33 & 42		
2	BRAKE SHOE	L.46330-1	2
	INCLUDES LINING		
3	BRAKE SHOE LINING GRADE C	2-915F37	2
	W/ TUBULAR RIVET BRASS 30X1/2 IN	20H1661D4	16
4	ALLEN HD SET SCREW CUP POINT 5/16-18X5/8	0682V048	2
	W/ HEX LOW NUT	2061V002	2
5	BRAKE SHOE PIN	19H1104	2
6	FRICTION PLUGS	19H1111	4
7	SPRING	17H330	2
8	S.A.E. WASHER	1/4 IN.	4
9	BRAKE JAW	L.46331	2
10	SPECIAL NUT	20H797	2
11	PIN	19H1108	1
12	PIN	19H1107	1
13	SPRING ROD & SEAT ASSEMBLY	L.46336	1
	INCLUDES SPRING & NUTS		
	SPRING ROD	20H796	1
	W/ HEX NUT 3/8 IN	2045V003	2
	LOW HEX NUT 3/8 IN	2061V003	1
14	PUSH ROD	L.46335	1
	INCLUDES ITEM 10 & 11		
15	PIN	19H1109	1
	W/PIN STEEL	1/8X1-1/8 IN.	1
16	SPRING SEAT	15H278	1
17	ALLEN HD SET SCREW CUP PTS 5/16-18X1/2 IN	0682V047	1
	W/ HEX NUT 5/16-18	2045V002	1
18	PIN	19H1106	1
19	SPRING	17H122	1
20	SPRING WASHER	18H1895	1
21	LEVER	6F122	1 -
22	SOLENOID G E 206A		1 -
	INCLUDES POT, PLUNGER, COVER, GUIDE WASHERS		
23	JAW STOP	L.46334	1
24	CAP SCREW 3/8-16X1 1/4 IN	0626V042	1
	W/ HEX LOW NUT 3/8-16	2061V003	1
25	BASE	L.46332	1
26	BRACKET	15E162	1 -
27	PIN	19H1105	2
28	SQ HD SET SCREW 5/16-18X1 IN	0626V023	2
29	NOT USED		
	W/ CAP SCREW 3/8-24X2 IN	0626V045	1
	HEX NUT 3/8-24	2045V003	1
30	LINK	L 46367	1 -

IMPORTANT: READ "INSTRUCTIONS" WHEN ORDERING REPAIR PARTS

REF. NO.	DESCRIPTION	PART NUMBER	AMOUNT REQUIRED
31	CAP SCREW 3/8 X 2-1/2	0626V .	1 -
	LOCKWASHER 3/8 IN	3616V009	
32	NOT USED		
	W/GASKET	20H845	1
	RD HD MACH SCREW 10-24X1/4 IN	0660V071	4
	LOCK WASHER	#10	4
33	COIL ADVERSE VOLTAGE PHASE AND CYCLE		
	REF 34 THRU 40 NOT USED		
41	NOT USED		
42	BRAKE WHEEL	13F356	1 -

OVERHEAD TRAVELING CRANES
LOCKHEED HYDRAULIC FOOT OPERATED BRAKE
General Description

PRICE BOOK
Sheet No. 225.03 (1)
Effective: 8-15-38
Replaces: 4-11-38

SYSTEM DIAGRAM

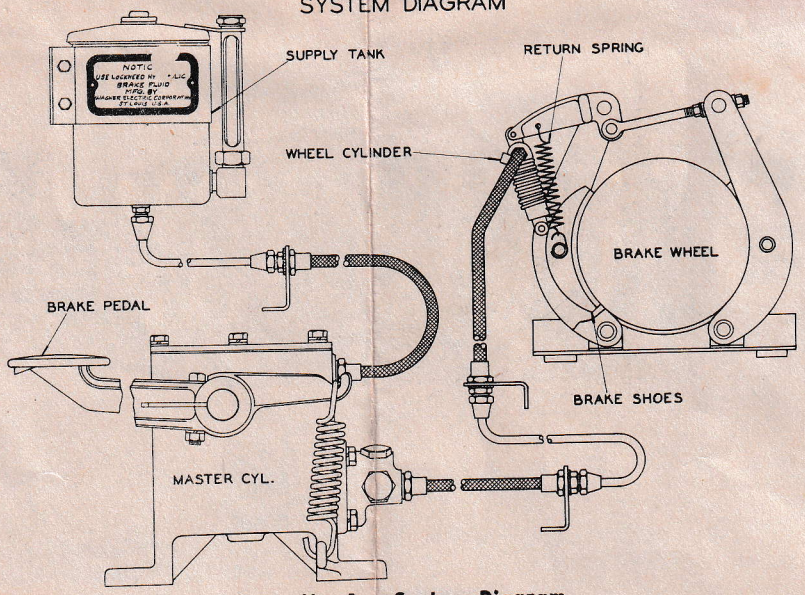

Figure No. 1 — System Diagram.

The Lockheed Hydraulic Brake System (Fig. 1) consists of a master cylinder in which the hydraulic pressure is originated; a wheel cylinder operating the brake shoes against the brake wheel, in which wheel cylinder the hydraulic pressure is applied; a supply or reserve tank by which the operating fluid is maintained at a constant volume; and the "line", consisting of copper tubing, flexible hose, brackets, and unions; interconnecting the master cylinder and wheel cylinders.

The master cylinder is fitted with a piston, and the wheel cylinder is fitted with an opposed piston; both of which are provided with cup packings, which act as a seal to maintain pressure and prevent loss of brake fluid.

The brake pedal, when depressed, moves the piston within the master cylinder, thus displacing the brake fluid from the master cylinder through the copper tubing and flexible hose connections into the wheel cylinder, and causing piston of wheel cylinder to move outward and operate brake mechanism.

As pressure on the pedal is increased, greater hydraulic pressure is built up within the wheel cylinder, and consequently, greater force is exerted against the shoes.

When pressure on the foot pedal is released, the brake shoe return spring retracts and returns the brake shoes to their normal or "off" position. The return movement of the brake shoes, in turn, causes movement of the wheel cylinder piston toward its off position, thus forcing the working fluid back through the flexible hose and copper tubing into master cylinder.

BOX TYPE MASTER CYLINDER

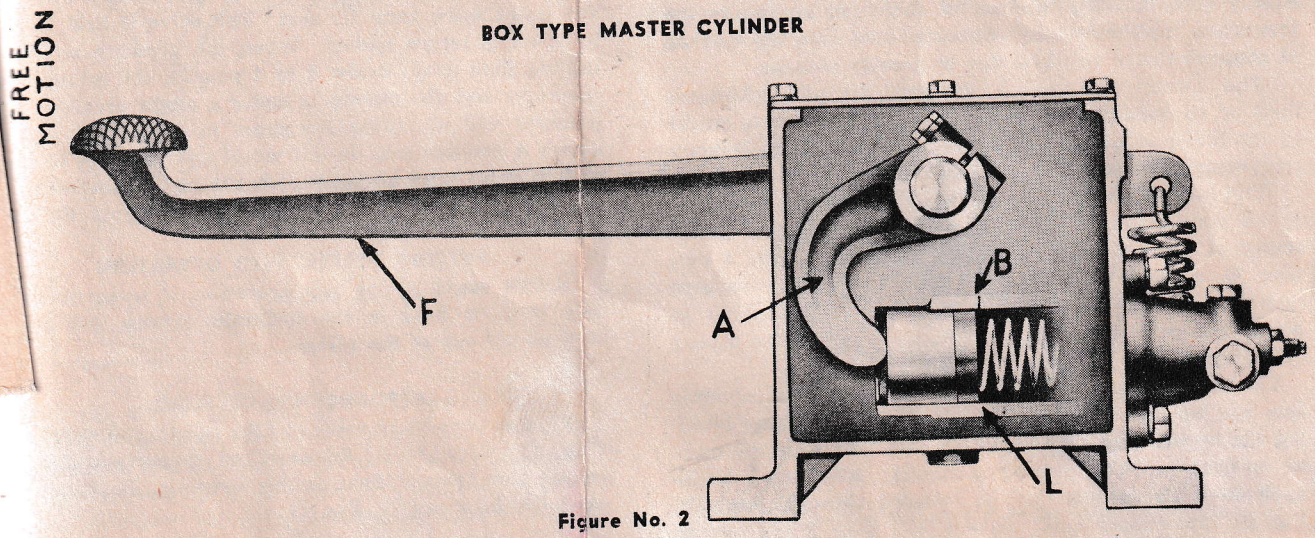

Figure No. 2

Figure No. 2 — Box Type Compensating Master Cylinder.

The master cylinder unit (Fig. 2) consists of a compensator, or reservoir, master cylinder proper (L, Fig. 2), inside lever (A, Fig. 2), outside lever (F, Fig. 2), and brake shaft.

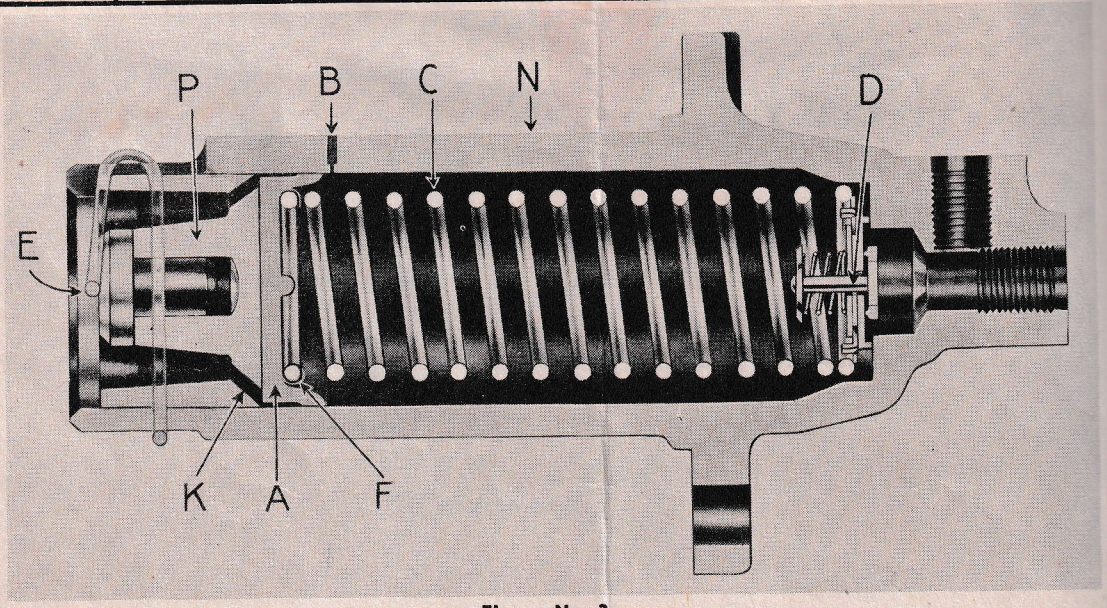

Figure No. 3

Figure No. 3 — Head and Barrel with Internals Used with Box Type Master Cylinder.

The master cylinder proper (Fig. 3) consists of the head and barrel (N, Fig. 3), piston stop (E, Fig. 3), piston (P, Fig. 3), piston cup (A, Fig. 3) and piston cup return spring (C, Fig. 3). This unit is contained within the Compensator (Fig. 2).

The Compensator serves as a reservoir to carry a reserve supply of fluid and protects the master cylinder submerged in fluid from taking in air, dirt, or water.

The master cylinder submerged in the fluid is known as the compensating type. Its primary compensating function is to maintain a constant volume of fluid in the system at all times, regardless of expansion or contraction of the fluid, due to temperature changes. The secondary compensating function of this type of unit is the immediate replacement of additional fluid into the system, to counterbalance any loss due to gravity seepage.

The master cylinder is designed to add additional fluid or to supercharge the system on the return stroke of the brake pedal after each brake application (secondary compensating function).

The fast return of piston (P, Fig. 3) and cup (A, Fig. 3) by return spring (C, Fig. 3) and the relative slower return of the fluid from the wheel cylinders causes a vacuum in cylinder (N, Fig. 3). The momentary vacuum created pulls fluid through drilled holes (K, Fig. 3) in piston and past the lip of cup (A, Fig. 3) into the master cylinder proper.

The introduction of additional fluid from the reservoir into the line on each brake application necessitates locating the bypass port (B, Fig. 3) directly ahead of the master cylinder cup (in release position). After each brake application all surplus fluid is released through port (B, Fig. 3) into supply tank. Brakes will drag if the bypass port is blocked, either from improperly set brake pedal, or swollen cups (caused from mineral oil) and pressure will be built up in the system, thus forcing shoes into contact with drums.

The compensator is kept filled by the supply tank, located at the highest point of the system, usually fastened to crane girder.

A double check valve (D, Fig. 3) is used in all master cylinders of the compensating type. It is held in the closed end of the master cylinder barrel by the piston cup return spring. The valve performs two functions:

It acts as a seal to prevent fluid or air being drawn into the system through the bleeder screw during the bleeding operation.

Fluid passed through the valve on the pressure stroke can return into the master cylinder barrel only by raising the entire valve from its seat. The valve is held in place by the cup return spring. When the pressure on the returning fluid drops below 6 to 8 pounds, the spring closes the valve and the system is under a slight pressure. This pressure will not cause the shoes to drag. It is used to assure a positive seal at the wheel cylinder cup packings.

The valve does not control brake pedal movement. Do not try to remedy this complaint by changing the valve.

PUTTING SYSTEM INTO OPERATION

Before crane is put into operation, it is necessary not only to have fluid in the hydraulic system, but also to ***have all air out of the system.***

INTRODUCTION OF FLUID

Fluid is introduced through filler opening in supply tank (Fig. 4). Care should be exercised to prevent dirt from getting into system through this opening. Be sure to replace the filler cap (J, Fig. 4).

OVERHEAD TRAVELING CRANES
LOCKHEED HYDRAULIC FOOT OPERATED BRAKE
General Description (Continued)

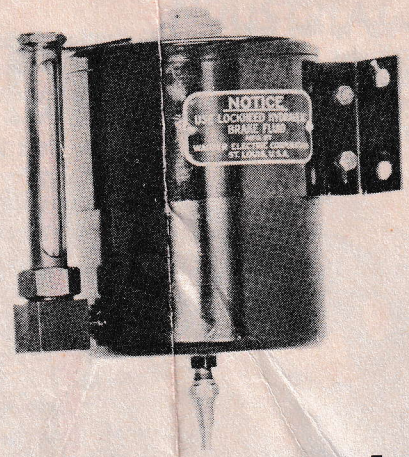

Figure No. 4 — External Supply Tank.

Inspect at regular intervals to insure a proper supply of fluid at all times.

CAUTION: ***Use only fluid furnished or Lockheed No. 21 fluid.***

BLEEDING THE SYSTEM

In bleeding the system, wheel cylinders with the bleeder screw on bottom should be inverted or placed in horizontal position as shown in Fig. 6 during the bleeding operation. Care must be taken to prevent wheel cylinder from extending beyond normal stroke or the protective boot will be damaged. Wheel cylinders mounted horizontally or with bleeder screw on top need not be removed from position. (See Fig. 6.)

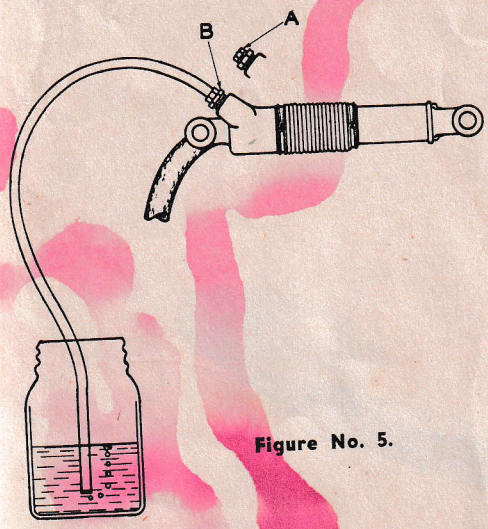

Figure No. 5.

Remove cap screw (A, Fig. 5) from end of bleeder connection and screw in bleeder drain provided for this purpose, which is a brass fitting with rubber tube attached. Allow tube to hang in clean container, such as a pint Mason jar. Unscrew bleeder connection B three-quarters of a turn and depress foot pedal slowly by hand, allowing return spring to return pedal to "off" position. This gives a pumping action which forces fluid through tubing and out at wheel cylinders, carrying with it any air that may be present. Approximately ten complete strokes of pedal will be necessary to bleed each wheel cylinder. Supply tank should always be full during this operation.

Watch flow of fluid from hose, the end of which should be kept below surface of fluid (Fig. 5), and when air bubbles cease to appear or when stream is a solid fluid mass, close bleeder connection. Open connection again to allow a slight amount of fluid to drain, then tighten bleeder connection securely.

USE NEW FLUID

Fluid withdrawn in "bleeding" operation should not be used again. The bleeding operation should be repeated on each wheel cylinder, and fluid should be replenished in the supply tank each time. Should supply tank be drained during bleeding operation, air will enter the system and "re-bleeding" will then be necessary.

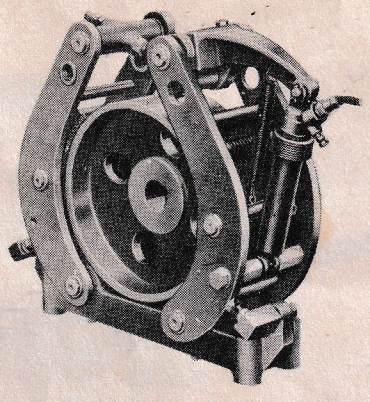

Figure No. 6—Floor Mounted Brake with Vertically Mounted Wheel Cylinder as Used on Large Brakes.

As the brake lining wears, the wheel cylinder stroke will increase until readjustment becomes necessary.

For maintenance hints see reverse side of this page.

Adjust by loosening nut "D" and drawing up on nut "E" (Figs. 6 and 7) until stroke of wheel cylinder is back to 1". This should be a maximum setting; closer adjustments may be made in some cases.

Equalize shoe clearance by means of set screws "F" (Figs. 6 and 7).

MAINTENANCE HINTS

No. 1 —PEDAL GOES TO FLOORBOARD.

Cause:

a—Normal wear of lining.
b—Leak in system.
c—Air in system.
d—Pedal improperly set.
e—No fluid in supply tank.

Remedy:

a—When brake linings become worn, it is necessary to set the shoes into closer relation to brake drums. This condition is usually accompanied by the remark that it is necessary to pump the pedal several times before a brake is obtained.

b — A leak in the system will allow the pedal, under pressure, to go to the floorboard gradually. If no leaks are found at wheel cylinder or joints, remove master cylinder and check bore of barrel for scoring or scratches.

c — Air in the system will cause a springy, rubbery action of the pedal. Should a sufficient quantity be introduced into the system, the pedal will go to the floor board under normal pressure. System should be bled.

d—Brake pedal should be set with approximately ½" free motion before the pressure stroke starts. Additional free motion reduces the active travel of the master cylinder piston, which in turn limits the amount of fluid to be expelled from the master cylinder into the line or system.

e—The fluid level in the supply tank should be checked at regular intervals. Should the tank become empty, air will be introduced into the system, necessitating bleeding. Keep tank at least half full.

No. 2 — BRAKES DRAG.

Cause:

a—Mineral oil in system.
b—Pedal improperly set.

Remedy:

a—The introduction of mineral oil, such as engine oil, kerosene, gasoline, or any fluid with a mineral base, into the system will cause the cups to swell and distort, making it necessary to replace all cups and flush system. Flush with a good grade of commercial alcohol. Do not use radiator alcohol. ***Use only Lockheed No. 21 Fluid in refilling.***

b—Directly ahead of the master cylinder piston (when in normal release position) is a relief port. It is imperative that this port be open when the brakes are released. (Brake pedal should be set with ½" free movement at pedal pad before pressure stroke begins.) Should this port be blocked by piston cup not returning to its proper release position, the pressure in the system will gradually build up and brakes drag. Opening a bleeder screw (B, Fig. 5) will allow built up pressure to escape and give temporary relief. Bleeder screw must be secured before operating brake.

P&H

INDUSTRIAL TYPE

HYDRAULIC BRAKE

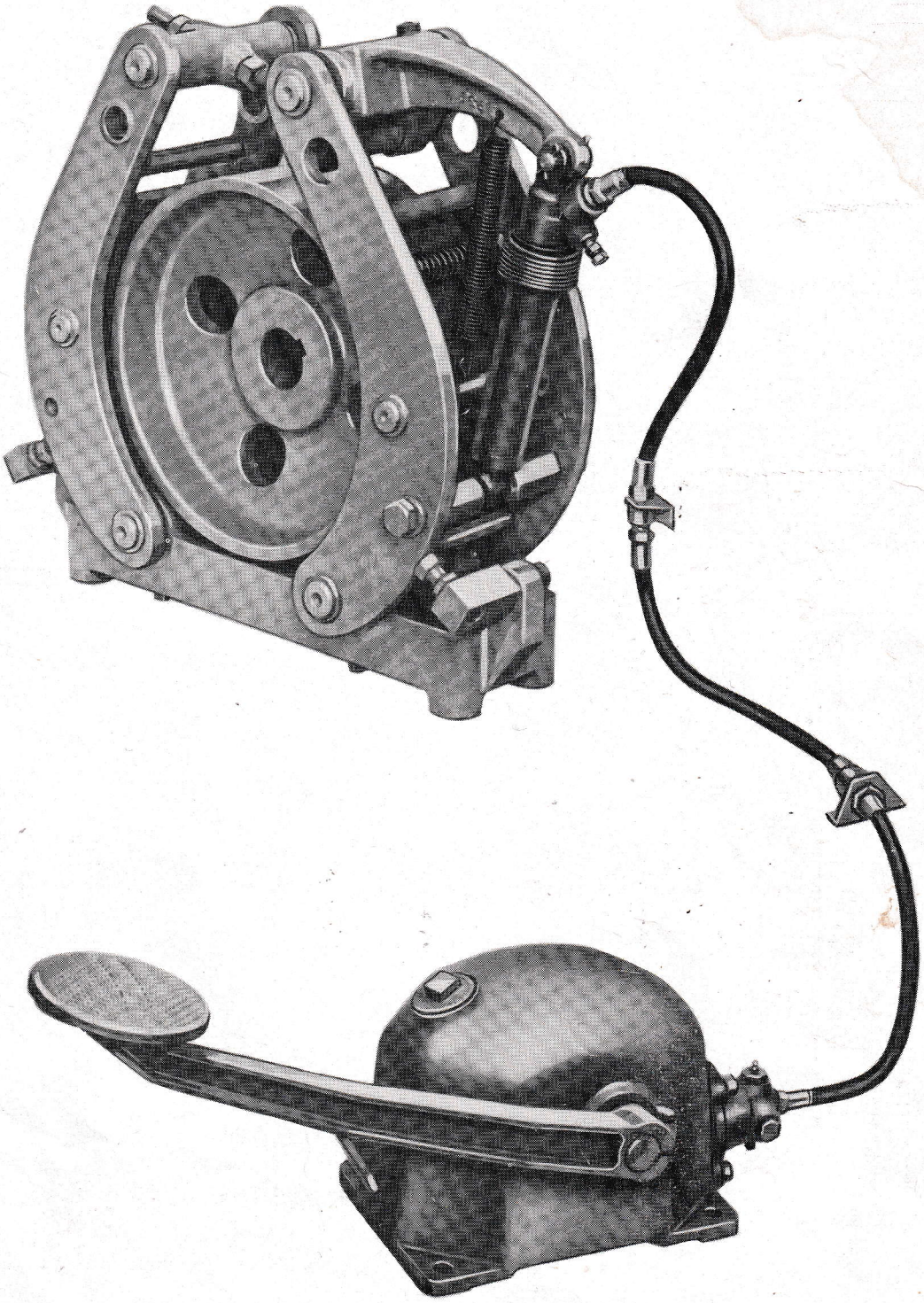

HARNISCHFEGER

CORPORATION

MOTORS ★ HOISTS ★ WELDING ELECTRODES P&H EXCAVATORS ★ ELECTRIC CRANES ★ ARC WELDERS

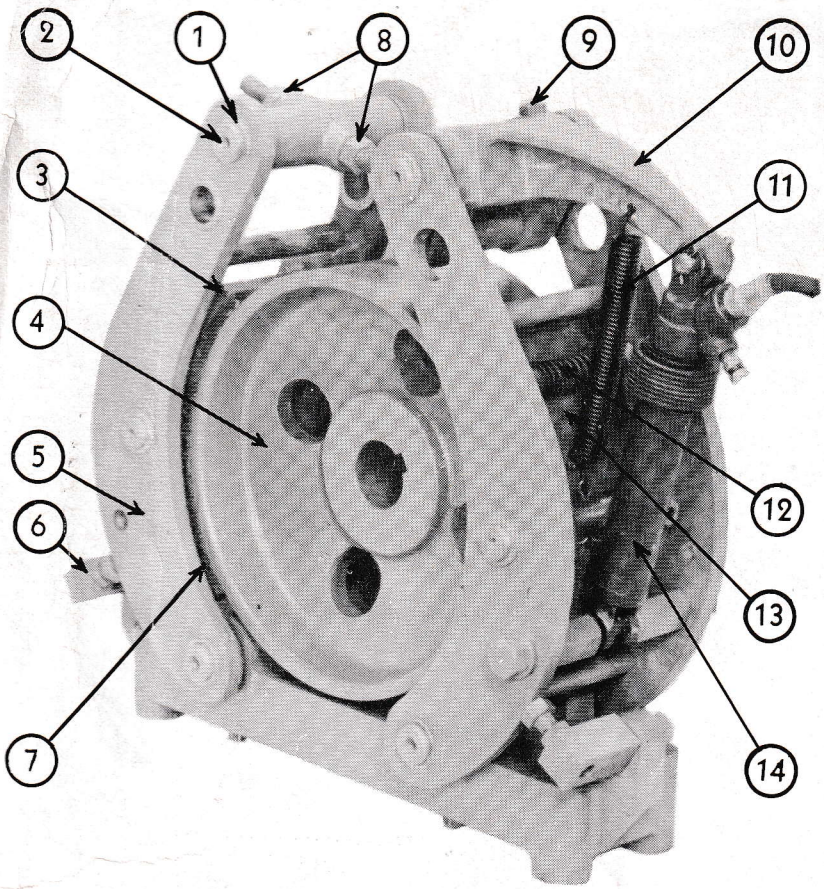

1 Hard bronze bushings permit closer fits, minimize play and reduce stroke.

2 Hardened pins with liberal bearing surfaces.

3 Thick lining of highest grade. Low wear rate, unaffected by high temperatures.

4 Alloy cast iron wheel—greater wear resistance without scoring.

5 Steel plate jaws welded together.

6 Removable jaw stops, allow jaws to be swung open for removal of wheel — adjustment need not be disturbed.

7 Jaws overlap wheel slightly, prevents the possibility of a loosened wheel from falling off the shaft.

8 Adjustment for wear made by turning of two nuts—removal of pins unnecessary.

9 Pins locked in place with setscrew and jam nut, compelling pins to rotate in bushings only—eliminates cotter pins on outside.

10 Short lever, short stroke, no danger of wheel cylinder pulling apart.

11 Long spring, no danger of over-stressing.

12 Brass friction plugs keep shoes from dragging when brake is open—shoe is self adjusting.

13 Shoes placed inside of jaws to permit easy removal for re-lining without disturbing jaws. Also permits locating pin closer to axis of equilibrium of frictional forces thus minimizing tip wear.

14 Wagner-Lockheed hydraulic equipment.

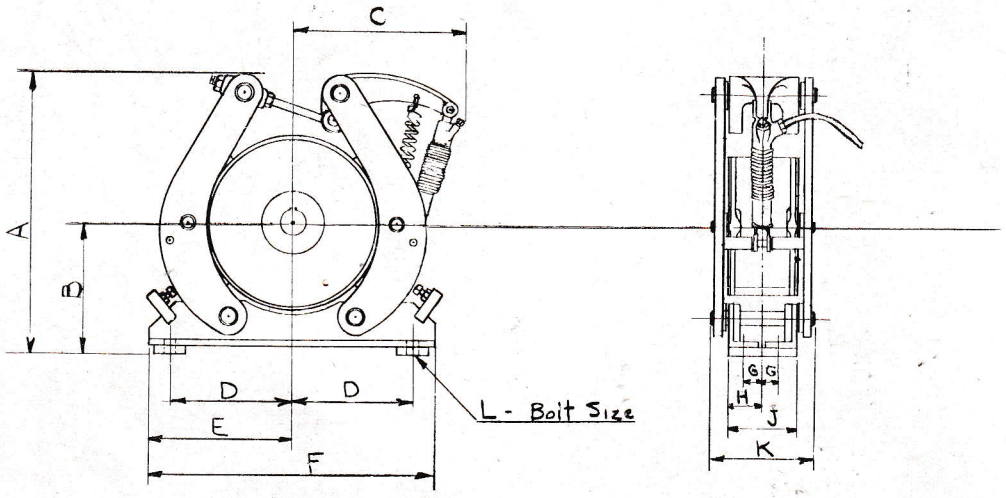

SIZE	WHEEL DIA.	WHEEL WIDTH	A	B	C	D	E	F	G	H	J	K	L		FT. LBS. TORQUE RATING
7-H-80	7"	3"	11 7/8"	5 1/4"	7 1/2"	4 1/4"	6"	12 5/8"	1 9/16"	2 1/8"	4 1/4"	4 1/4"	1/2"		80
9-H-17.5	9"	4"	15 3/16"	7"	8 3/8"	6"	6 3/4"	13 1/2"	2 1/4"	3"	6"	5 1/16"	1/2"		175
11-H-300	11"	4 1/2"	18"	8 1/2"	11 1/4"	7 1/2"	8 1/2"	17"	1 1/2"	2 5/16"	4 5/8"	6 5/8"	1/2"		300
13-H-600	13"	6"	21"	9"	13 1/8"	9 1/4"	10 1/4"	20 1/2"	2"	2 3/4"	5 1/2"	8 1/4"	5/8"		600
15-H-800	15"	7"	24 3/4"	11 1/8"	14"	10 1/4"	12"	24"	3 1/2"	4 3/4"	9 1/2"	9 1/2"	3/4"		800
18-H-1200	18"	8"	28 1/4"	12 1/2"	15"	11"	13"	26"	5"	6 1/2"	13"	10 1/2"	3/4"		1200
21-H-1600	21"	9 1/2"	31 7/8"	14 5/8"	22 1/4"	13"	16"	32"	5 1/4"	6 3/4"	13 1/2"	12 1/2"	3/4"		1600

HARNISCHFEGER CORPORATION

4400 W. NATIONAL AVE.

MILWAUKEE, WIS.-U. S. A.

LITHO IN U. S. OF A.

FORM NO. 0-352

BILL OF MATERIAL

NAME	PART Nº	PATT Nº	MAT.	ITEM Nº
BASE	15A30		ST'L.	1
3/8"-16 x 1 1/4" SQ. HD. SET SCR.	SCR.		ST'L.	2
JAWS COMPL.	15E109-F2		ST'L	3
SHOES COMPL.	915F31		ST'L.	4
FRICTION PLUGS	19H970		BR.	5
SPRINGS	113K47211		ST'L.	6
3/8"-16 x 1" ALLEN SET SCR. (CUP POINT)	SCR. (CUP POINT)		ST'L.	7
3/8" HEX. JAM NUT			ST'L.	8
PINS	19H1062		ST'L.	9
PINS	19H1064		ST'L.	10
PULL ROD	15H344		ST'L.	11
CROSS HEAD	15H254	15H254	C.I.	12
3/4"-10 HEX. NUT			ST'L.	13
PIN	19H1281		ST'L.	14
3/16" DIA. x 1 11/16" LG. PIN			ST'L.	15
PIN	19H1061		ST'L.	16
LEVER	6F162	6F140M	P&H #1	17
SPRING	17H106		ST'L.	18
EYE BOLT	20H913		ST'L.	19
#10-24 HEX. NUT			ST'L.	20
1/2"-13 x 1 3/4"				

39

51534	FLOOR MOUNTED BRAKE
LIST Nº	REMARKS
SCALE 6"=1'-0"	DATE 2-19-43
DR. BY ERV	HARNISCHFEGER CORPORATION MILWAUKEE, WIS.
TR. BY ERV	ASSEMBLY
CH. BY	FIRST MADE FOR 13-SAH-BRAKE
APP. BY CH. ENG. F.W.N.	DWG. No. 100A1079
APP. FOR STAND.	
DATE	

ILLUSTRATION CB-9
HYDRAULIC BRAKE KIT

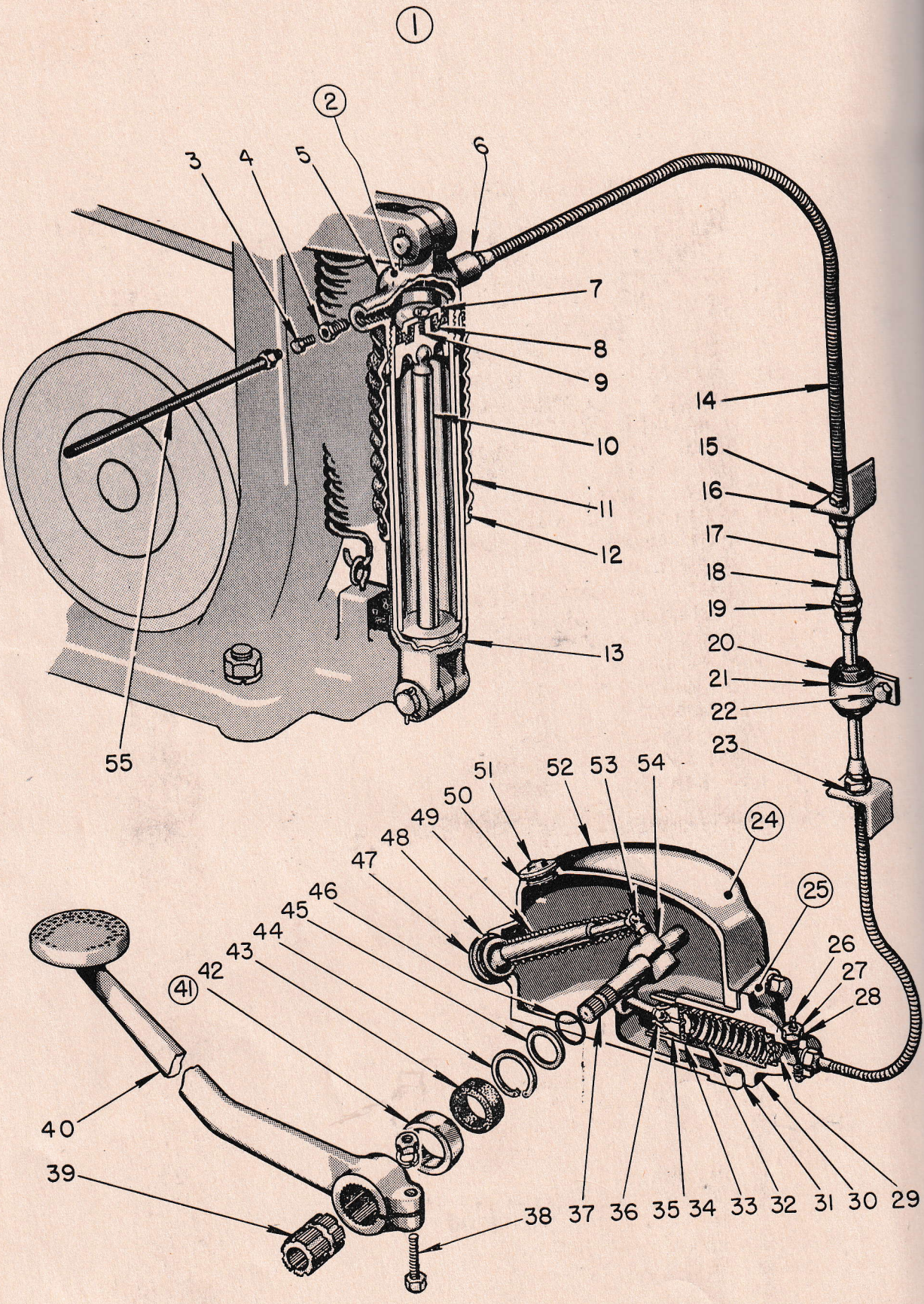

HARNISCHFEGER CORPORATION — MILWAUKEE 46, WISCONSIN

ILLUSTRATION CB-9-2

HYDRAULIC BRAKE KIT

BRIDGE

REF. NO.	DESCRIPTION	PART NUMBER	AMOUNT REQUIRED
	CRANE 12362-3		
1	HYDRAULIC BRAKE KIT	L.58574-2	1
2	WHEEL CYLINDER ASSEM 1 1/8 IN DIA WAGNER INCLUDES REF. NOS. 3-13	FD-4443	1
	NOTE - WHEEL CYLINDER WAG-JFD-7905 P AND H RECOMMENDED IF ANY MAJOR PART OR IF A NEW UNIT IS REQUIRED	38Z18	
3	DUST SCREW & L.W. INCLUDED W/NO.4		
4	BLEEDER SCREW W/REF 3 WAG-FD-372	20Z34	1
5	BODY ASSEMBLY - WAGNER FC-5827	45Z73	1
6	GASKET - WAGNER FC-17	20Z84	1
7	CUP RETAINER NOT REQUIRED		
8	PISTON CUP - WAGNER FC-2400	45Z53	1
9	SCREW & L.W. NOT REQUIRED		
10	PISTON - WAGNER FC-2401	39Z17	1
	PISTON STOP WASHER - WAGNER FC-2389	18Z69	1
11	BOOT - WAGNER FC-2395	45Z52	1
12	BOOT LOCKWIRE - WAGNER FC-2390	45Z51	2
13	LINK AND SLEEVE ASSEM--WAGNER FC-2563	6Z46	1
14	ARMORED HOSE - WAGNER FC-10160	44Z100	2
15	HEX JAM NUT 1/2 IN -20	2065V003	2
16	BRACKET - WAGNER FC-5780	16Z11	1
17	5/16 IN. TUBING 50 FEET		1
18	TUBE CUT - WAGNER FC-86	44Z150	4
19	TUBE UNION - WAGNER FC-4080	44Z91	1
20	BUSHING - WAGNER FC 5137	44Z96	15
21	BUSHING CLIP - WAGNER FC-5138	32Z30	15
22	CLIP BOLT ASSEMBLY - WAGNER FC-5142	20Z271	15
23	SHAKEPROOF L.W.	#1224	2
24	MASTER CYLINDER ASSEM - WAGNER JFC-8142 INCLUDES NOS. 25-37 & 42-54	38Z19	1
25	HEAD AND BARREL ASSEM - WAGNER JFD-6912 INCLUDES NOS. 29,30,32-36	45Z79	1
26	BLEEDER SCREW - WAGNER FC-6446	20Z98	1
27	BLEEDER SCREW ADAPTER - WAGNER JFC-7346	45Z80	1
28	OUTLET GASKET - WAGNER FC-17	20Z84	1
29	CHECK VALVE - WAGNER FC-1266	36Z18	1
30	HEAD AND BARREL - WAGNER JFD-6911	45Z78	1
31	HEAD GASKET - WAGNER FC-1396	20Z88	1
32	RETURN SPRING - WAG FC-1275	17Z21	1
33	PISTON CUP - WAGNER FD-951	45Z33	1
34	PISTON - WAGNER - 3094	39Z19	1
35	PISTON STOP WIRE - WAGNER FC-1000	39Z11	1
36	SUPPORT RING - WAGNER FC-1960	18Z65	1
37	SHAFT - WAGNER JFD-7157	10Z33	1
38	BOLT 1/2-20X2 1/4 IN	0627V079	1
		STD. HDW.	1

IMPORTANT: READ "INSTRUCTIONS" WHEN ORDERING REPAIR PARTS

REF. NO.	DESCRIPTION	PART NUMBER	AMOUNT REQUIRED
	W/ NUT 1/2 - 20	2049V005	1
	LOCKWASHER 1/2IN	3615V011	1
39	LOCATING BUSHING - WAGNER JFD-8178	5Z14	1
40	PEDAL ASSEMBLY - WAGNER JFD-8219	6Z51	1
	INCLUDES NOS. 38 & 39		
41	SHAFT SEAL REPAIR KIT	SA-453	1
	INCLUDES NOS. 42-46		
42	FELT RETAINER - WAGNER JFC-11277	18Z82	1
43	FELT SEAL - WAGNER JFC 11278	18Z83	1
44	SNAP RING - WAGNER JFC-11279	18Z84	1
45	RETAINER PLATE - WAGNER JFC-11275	18Z80	1
46	O RING - WAGNER JFC-11276	18Z81	1
47	RETAINER CAP - WAGNER JFC-8026	14Z26	1
48	RETAINER CAP GASKET - WAGNER FC-7370	20Z100	1
49	LEVER SPRING ASSEMBLY - WAGNER JFC-8024	6Z50	1
50	FILLER CAP GASKET - WAGNER FC-6019	20Z97	1
51	FILLER CAP ASSEMBLY - WAGNER FC-6018	14Z25	1
52	SUPPLY TANK AND BEARING ASSEMBLY	JFE2842	1
53	LEVER CLAMP BOLT - WAGNER JFC-8037	20Z102	1
54	LEVER - WAGNER JFD-7158	6Z49	1
55	BLEEDER DRAIN - WAGNER FC-131	44Z78	1
56	GALLON FLUID NOT SHOWN	#21	1

OVERHEAD TRAVELING CRANES
HYDRAULIC FOOT OPERATED BRAKE
Care and Operation

PRICE BOOK
Sheet No. **270.03 (3)**
Effective: 10-27-44
Replaces: 225.03 (1) & (2)
8-15-38

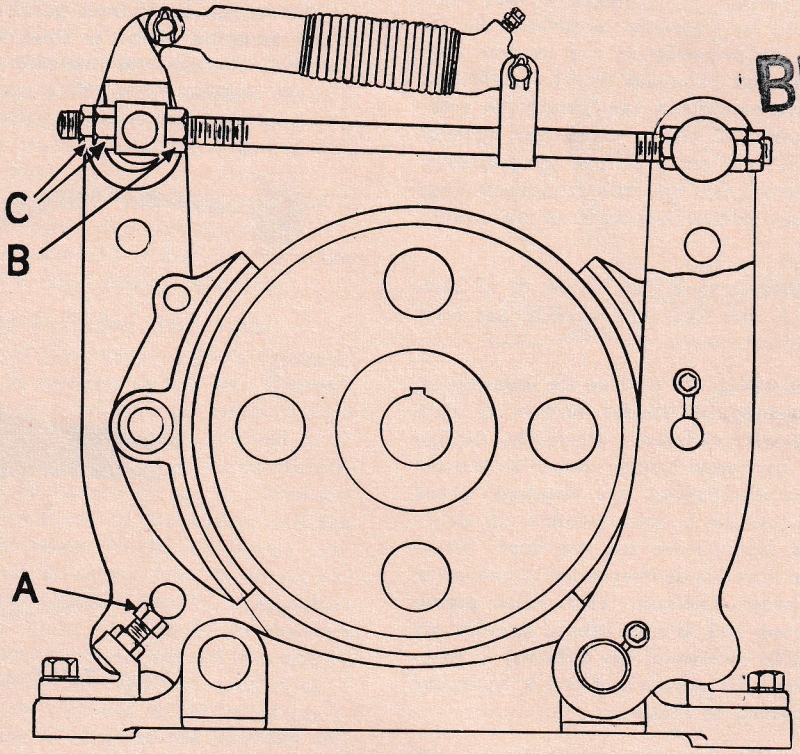

BRIDGE

BRAKE ADJUSTMENTS

Adjust brake to allow approximately .025" ...rake shoe clearance under each shoe. Adjust ...rake shoe clearance with adjusting nuts "B" and "C." To reduce shoe clearance back off adjusting ...t "B" and tighten adjusting nut "C." Be sure that lock nut "C" is locked tight after adjustment is completed.

Shoe clearance should then be equalized with adjusting screw "A" to obtain equal clearance under both shoes.

GENERAL MAINTENANCE HINTS

...e hydraulic system does not ordinarily consume any ...d. Loss of fluid is caused by a leak or leaks in the ...em at such points as the tube connections, gaskets, or ...el cylinders. The system should periodically be checked ...leaks and their cause corrected. If the foot pedal can ...ually be forced to the floor under steady pressure, there ...obably a leak, due to normal wear, at the piston cup ...her the master cylinder or wheel cylinder. If the leak ... the wheel cylinder, fluid will be noticeable at the end ...e rubber boot covering. If the pedal goes to the floor ...o leaks are visible, the trouble is probably due to a ... piston cup in the master cylinder. In either case, ...orn piston cup should be replaced. A "spongy" pedal ...tes the presence of air in the system. If such is the ...system should be bled. (See bleeding instructions on ...2.) DO NOT introduce kerosene, gasoline, mineral oil, or cleaner solvent into the system because it will cause the piston cups to swell and distort, and result in piston cup failure. Directly ahead of the master-cylinder piston cup (when in normal position) are three by-pass port holes. It is imperative that these port holes are open when the brake is released in order to allow the working fluid to return into the master cylinder reservoir. The introduction of mineral oil into the system, will cause the port holes to be blocked by the swelled piston cup and the brake will drag.

If kerosene, gasoline, mineral oil or cleaner solvent is found present in the hydraulic system when it is disconnected, the entire system should be flushed with clean alcohol, all rubber parts replaced, and the system refilled with Lockheed No. 21 Brake Fluid.

BLEEDING INSTRUCTIONS

The term "bleeding" as applied to hydraulic brake systems, aptly describes the operation of removing air from the actuating cylinder and connecting lines. Properly bleeding air from a hydraulic system is necessary to fully realize the advantages offered by hydraulic actuation. As air is highly compressible, its presence in the system may cause a "spongy" pedal, loss of pedal travel, insufficient fluid capacity, etc. These conditions can usually be remedied by a thorough removal of air from the system. Hydraulic brake fluid is not compressible, consequently when the system is free of air, the master-cylinder foot lever will feel "solid," and proper operation of the brakes can be attained.

Bleeding is required after a new installation, or at such times when some part of the hydraulic system has been disconnected for replacement, repair, etc.

The convenience of bleeding, as well as its importance, has prompted the furnishing of bleeder screws at each wheel cylinder and master cylinder. Normally, bridge brakes are mounted on the crane bridge above the master cylinder, but oftentimes installations are required where the brake is mounted below the master cylinder. In either case, the basic bleeding instructions are the same. Fluid lines should be carefully installed so they slope consistently upwards towards a bleeder location. Horizontal piping should be avoided. Loops and U's in tubing provide air traps and are objectionable because of the difficulty in thoroughly removing the air. To properly bleed a hydraulic bridge-brake system, proceed as follows:

1. Remove filler cap (K) (see illustration below) and fill hydraulic master cylinder with Lockheed No. 21 brake fluid, a fluid recommended for industrial service. During the bleeding operation, the master cylinder reservoir should be kept full of fluid at all times. If reservoir is allowed to drain, air will enter the master cylinder, be pumped into the system, and re-bleeding will be necessary. The master cylinder assembly is a combination reservoir and master cylinder.

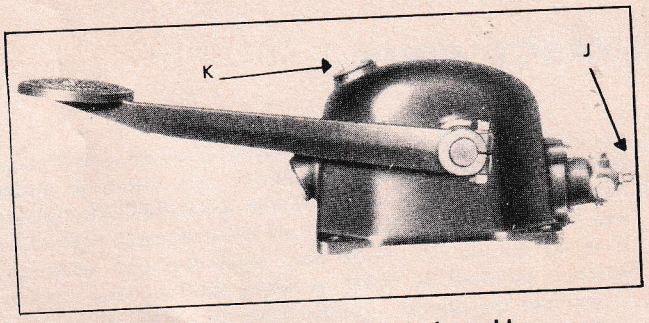

Hydraulic Master Cylinder Assembly

2. Remove cap screw (G) (in illustration to right above) from end of bleeder screw in wheel cylinder, and in its place screw in bleeder drain allowing hose to hang in a clean glass container.

3. Loosen bleeder screw (H) three-quarters of a turn with bleeder wrench intended for this operation.

4. Depress master-cylinder foot-lever slightly and allow return spring to force pedal return. By repeating this a pumping action is thus obtained which forces the fluid through the line and out the hose attached to the bleeder screw. This operation is to be continued until the fluid being expelled from the bleeder drain is free of air bubbles.

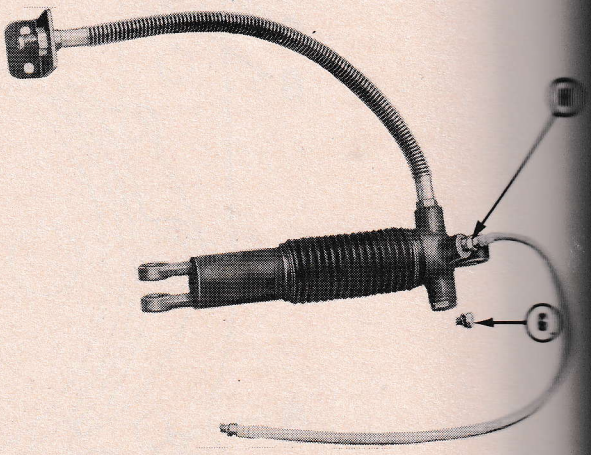

Wheel Cylinder Assembly

5. Bleeder screw (H) is now tightened, closing the bleeder valve. Remove bleeder drain and replace cap screw (G). Do not disturb bleeder hose or remove it from fluid contained until bleeder screw is tightened.

6. Slip hose end of bleeder drain over fitting (J) provided in master cylinder. Repeat bleeding operation in a similar manner as described above until the fluid being expelled from bleeder drain is also free of air bubbles.

NOTE: On Double-Bridge Braking Systems with a SINGLE master cylinder, bleeding must be performed at each wheel cylinder separately before bleeding master cylinder. On Single-Bridge Braking Systems with TWO master cylinders (two-station operation) bleeding operations should be completed on one master cylinder and the wheel cylinder, then the procedure repeated on the remaining master cylinder and the same wheel cylinder. On Double-Bridge Braking Systems with TWO master cylinders (two-station operation) bleeding operations should be completed on one master cylinder and both wheel cylinders dealing with each wheel cylinder separately; then the procedure should be repeated on the other master cylinder and the same two wheel cylinders.

CAUTION: Fluid that has been drained through the system should not be used again unless the operator is absolutely certain that no gasoline, kerosene, mineral oil, grit, etc., have been introduced into the glass container.

MASTER CYLINDER SERVICE INSTRUCTIONS

Its Purpose

The master cylinder is the unit in which hydraulic pressure is originated. This pressure is transmitted through the fluid lines to the hydraulic cylinder at the brake wheel where it actuates the brake shoes. The brake shoes are provided with return springs which pull the brake shoes and the hydraulic wheel cylinder piston back to their release position when pressure on the brake pedal is released. The master cylinder assembly has three distinct functions:

1. To displace fluid and transmit pressure into the fluid lines and hydraulic wheel cylinder (or cylinders).
2. To constantly maintain the correct volume of fluid in the system under all temperature conditions.
3. To add fluid or supercharge the system on the return stroke of the pedal after each brake application.

How the Master Cylinder Operates

A cross-section drawing of the master-cylinder assembly is illustrated at the right. It operates as follows: Pressure on the foot pedal causes the internal lever to revolve around anchor point "A." The socket end of the internal lever forces the link "B" against the head of the master-cylinder piston which is thereby forced toward the outlet end of the cylinder. A very slight movement of the piston and cup closes the three by-pass port-holes. In the full-release position of the piston, these port holes are open to permit expansion and contraction of the fluid due to temperature changes. When these port holes are closed, the pressure stroke starts and, as the piston travels toward the end of the cylinder, fluid is forced out through the inner part of the check valve into the tube lines and wheel cylinders.

The check valve, which is a two-way outlet valve, has two functions: First, it is designed to retain a residual pressure of 8-12 pounds in the lines, preventing the column of fluid from draining back into the master cylinder; second, it facilitates bleeding the system by allowing a new charge of fluid from the master cylinder reservoir to enter the master cylinder barrel.

When pressure on the foot pedal is quickly released, the fast return of the piston cup by the piston return spring, and the relatively slower return of fluid from the wheel cylinders and the lines, causes a vacuum in the master cylinder barrel. This momentary vacuum pulls additional fluid from the reserve supply through the piston intake port holes (only two shown), past the lip of the piston cup, supercharging the system. When the brakes return to the "off" position, surplus fluid can escape through the by-pass port holes to normalize the pressure in the system. The foot pedal is forced back to its release position by the pedal return-spring.

Some installations may still require the use of an additional fluid tank, but only as a means of equalizing the head pressure created by the column of fluid where the brake is located twelve feet or more above the master cylinder assembly. Under these conditions, the head pressure is sufficient to cause the check valve, mentioned above, to open slightly allowing a return of fluid to the master cylinder. In order to equalize this increased head pressure and thereby prevent the return of fluid to the master cylinder, it is recommended that the auxiliary fluid tank be installed at the same height as the brake on all ladle cranes or similar applications where the difficulty is encountered.

Service Instructions

As illustrated, the hydraulic master cylinder assembly is a combination master cylinder and fluid reservoir built in one compact unit. The cylinder is submerged in the fluid and the piston is operated by a lever within the reservoir.

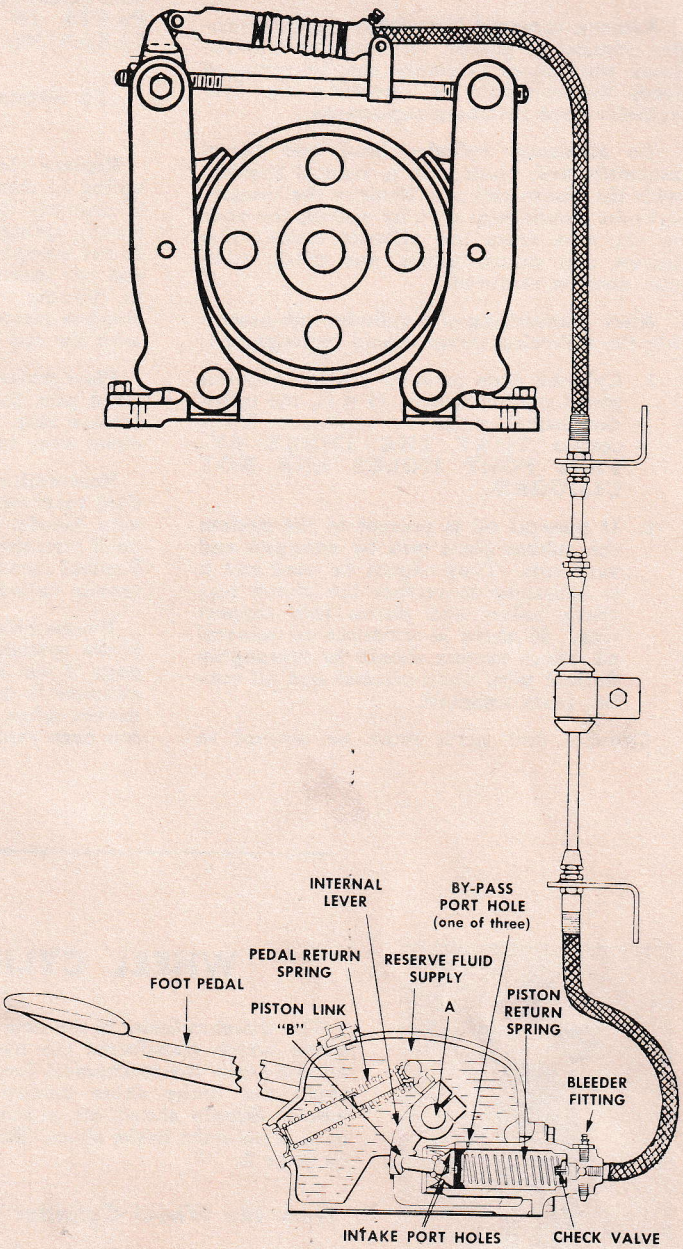

System Diagram

This internal lever is supported and actuated by a shaft extending through the reservoir. The foot pedal arm is attached to this shaft. A shaft seal is provided where the shaft extends through the side of the reservoir and is located in a recessed groove at the end of the shaft boss.

In order to service or renew any parts in the master cylinder, the entire master cylinder assembly should be removed to a clean and convenient location. To remove the assembly from the system, first disconnect the armored hose at the point where it is attached to the copper tubing. It is advisable to immediately place a clean container beneath the copper tube opening when the tube nut is disconnected in order to catch the fluid. Most of the fluid in the master cylinder reservoir can be removed by pumping the foot pedal thereby forcing the fluid out of the disconnected end of the armored hose into a clean container. Next, remove the master cylinder assembly mounting bolts. The entire assembly can now be moved.

MASTER CYLINDER SERVICE INSTRUCTIONS

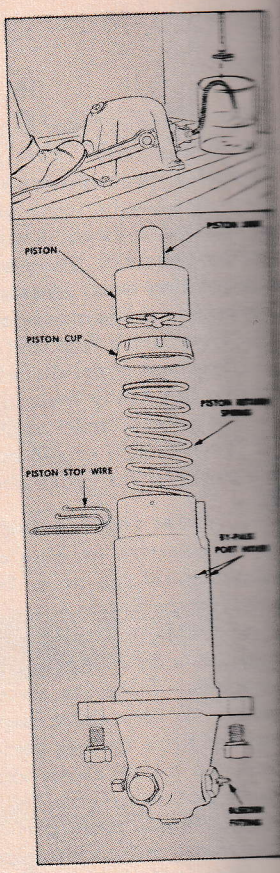

To Dismantle Cylinder

Remove armored hose from master cylinder, discarding gasket. The master-cylinder head and barrel assembly can be removed from the reservoir by removing the four cylinder-head retaining-cap-screws.

To dismantle cylinder head and barrel assembly first place it in a vertical position with the piston end up. Remove the master-cylinder piston-stop-wire by pulling the ends of the wire from the cylinder holes. The piston, cup, return spring, and check valve can then be removed.

After dismantling the cylinder sub-assembly the following items should be inspected:

1. Cylinder bore must be smooth and not pitted nor scratched. If it is, the cylinder barrel must be replaced. Make certain THAT THE THREE BY-PASS PORT HOLES ARE NOT CLOGGED.
2. If mineral oil is present in the system the rubber parts will be enlarged and very soft. They cannot be used and it is necessary to replace the piston cup, check valve, and piston link support ring. If there is evidence of mineral oil, entire system should be thoroughly flushed with clean alcohol and all rubber parts replaced.

Cylinder and parts must be washed in clean alcohol and dipped in Lockheed brake fluid before reassembling. DO NOT WASH PARTS IN GASOLINE, KEROSENE, CLEANING SOLVENT, OR OIL.

To Reassemble Master Cylinder Assembly

Replace check valve in bottom of return spring so that the spring portion of the valve is properly fitted into the lower end of the return spring. With the cylinder head and barrel assembly in a vertical position (piston end up) insert return spring and check valve in cylinder. (Check valve to the bottom.) Replace piston cup over end of return spring with the cup lips downward.

Place piston on top of cup and force downward past piston-stop-wire-anchor-holes and replace stop wire. Loop of wire should be down over cylinder barrel.

Reassemble head and barrel assembly in fluid reservoir using a new head gasket. Be sure bleeder fitting is up. Replace cylinder head retaining cap screws and lock washers. Replace armored hose in fluid outlet of master cylinder using new gasket.

Reassemble master cylinder assembly in brake system and bleed entire system. See page 2 for bleeding instructions. If wheel cylinder is to be serviced, it should be removed after the master cylinder assembly has been replaced in the system.

WHEEL CYLINDER SERVICE INSTRUCTIONS

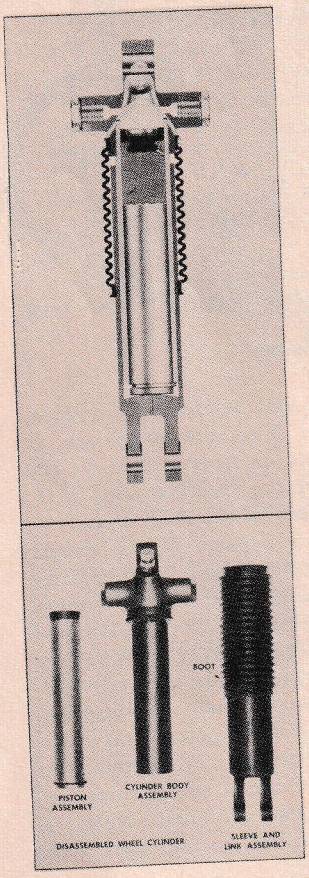

The wheel cylinder is the unit at the brake wheel which transforms the hydraulic fluid pressure into the mechanical force needed to apply the brake shoes against the brake wheel. Simply stated, its principal function is to actuate the brake shoes. See illustration on page 2.

How the Wheel Cylinder Operates

A cross-section of the wheel cylinder assembly is illustrated at the left. The unit is of telescopic design suspended at each end by pins. Fluid pressure causes the unit to expand in length thereby exerting force against the brake lever arm. The assembly is composed of three basic parts: the sleeve-and-link assembly, the cylinder-body assembly, and the piston. Fluid displacement through the inlet port of the cylinder-body assembly forces the piston against the inner end of the sleeve-and-link assembly which, in turn, telescopes on the cylinder-body assembly. The rubber boot expands and contracts as this telescopic action takes place. Its only function is to prevent the entrance of dirt. A port hole in the link end of the sleeve-and-link assembly provides an air vent ahead of the piston. This air vent should remain open. Make certain that it is not clogged with dirt.

Service Instructions

To remove the wheel cylinder from the system, disconnect armored hose at wheel cylinder fluid-inlet and remove pins locating wheel cylinder on brake. Disassemble wheel cylinder by loosening the clamp wires at both ends of the rubber boot and remove boot. This will allow the cylinder-body assembly and piston to slide out of the sleeve-and-link assembly. See illustration. Pull the piston from the cylinder body. The rubber piston cup is of the button type and is attached to the end of the piston.

After dismantling the wheel cylinder the following items should be inspected:

1. The bore of the cylinder-body assembly must be smooth and not pitted or scratched. Replace if necessary.
2. If mineral oil is present in the system the rubber parts will be enlarged and very soft. They cannot be used and it is necessary to replace the piston and the sleeve-and-link boot. If there is evidence of mineral oil, entire system should be thoroughly flushed with clean alcohol and all rubber parts replaced.

All parts must be washed in clean alcohol and dipped in Lockheed brake fluid before reassembling. DO NOT WASH PARTS IN GASOLINE, KEROSENE, CLEANING SOLVENT, OR OIL. When thoroughly clean, assemble parts, replace wheel cylinder in system, and bleed system. See page 2 for bleeding instructions.

ILLUSTRATION CC-1

"R C S" CRANK OPERATED CONTROLLER

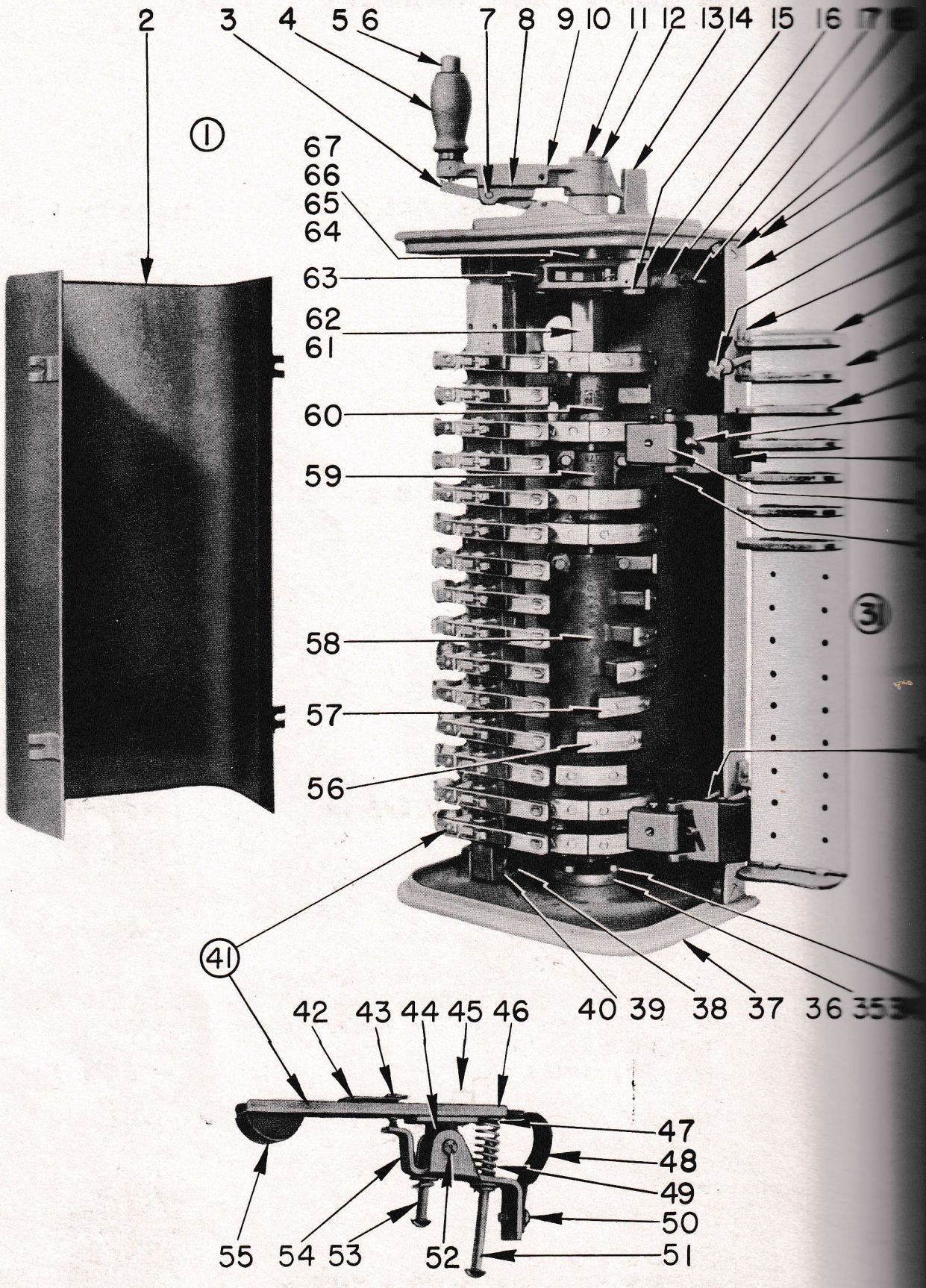

HARNISCHFEGER CORPORATION — MILWAUKEE 46, WISCONSIN

MAIN HOIST

ILLUSTRATION CC-1-7

AUX. HOIST

RCS-2101R CRANK OPERATED CONTROLLER

REF. NO.	DESCRIPTION	PART NUMBER	AMOUNT REQUIRED
	CRANE 12362-3		
1	RCS-2101R CONTROLLER W/ARC SHIELDS	L.29739-1	1
	INCLUDES ITEMS 2 TO 67		
2	COVER	L.29620	1
3	LATCH COVER	6H442	1
4	WOOD HANDLE	6H441-F1	1
5	THUMB BUTTON	L.9395	1
6	STUD	20H1631	1
7	PIN FOR LATCH LEVER	19F79D31	1
8	SPRING FOR LATCH LEVER	17T97	1
9	LEVER ONLY	80F113	1
10	LEVER COMPLETE	L.51666	1
	INCLUDES ITEMS 3 TO 9		
11	CAPSCREW A L W 3616V008 5/16 X 3/4 IN	0626V021	1
12	WASHER	18H1304	1
13	LEVER BRACKET	80E47	1
14	FL. HD. SCREW FOR BRACKET	3/8X1 IN.	20
15	SPEC. MACH. BOLT	20T295	1
16	LATCH COMPLETE	L.7017	1
	INCLUDES ITEM 17		
17	SPRING	17H313	1
18	HOOK	20H1603	1
19	FL. HD. CAPSCREW	5/16X1 IN.	4
20	TOP PLATE	80E46	1
21	FRAME	80E100	1
22	LATCH FOR COVER	L.29528	4
23	ROD HEAD MACHINE SCREW 1/4 X 1/2 IN	0660V109	3
24	STEEL PLATE	80F168	1
25	TRANSIT BOARD	80F170	1
26	ARC BARRIERS	80H820	3
	W/ RD HD MACHINE SCREW B L W 3616V007	0660V112	16
27	THUMB SCREW 3/8 X 1 IN	20H1687D10	2
28	BLOW OUT BRACKET	80F393	2
	W/ RD HD MACHINE SCREW B L W 3616V007	0660V111	4
	RD. HD. MACH. SCREW & L.W.	1/4X3/4 IN.	2
	RD HD MACHINE SCREW D L W 3616V007	0660V112	2
29	BLOWOUT COIL HOLDER	80F394	2
	W/SQ. HD. SET SCREW	3/8X5/8 IN.	2
30	PIN	PC.956	2
31	BLOWOUT STRUCTURE	L.29531-1	1
	W/OUT COILS AND ARC BARRIERS		
	INCLUDES ITEMS 24, 25, 28, 29 & 30		
32	BLOWOUT PIN	19H822	2
33	CAPSCREW A L W 3616V007	0626V006	4
34	LOWER CAP	80H318	1
35	FELT STRIP 1/8 X 5/32 X 4 IN	252376D2	1
36	BALL BEARING SCHATZ MFG CO 2250 TYPE B		1

IMPORTANT: READ "INSTRUCTIONS" WHEN ORDERING REPAIR PARTS

REF. NO.	DESCRIPTION	PART NUMBER	AMOUNT REQUIRED
37	BASE A - 3616V009	80E51	1
38	MACHINE BOLT W/ L W B P W 3612V004	0609V061	1
39	FINGER BOARD COMPLETE W/14 FINGERS	L.29621	1
	INCLUDES ITEMS 40 TO 55		
40	FINGER BOARD ONLY	80F163	1
41	FINGER COMPLETE		14
	DETAIL, ITEMS 45,46,49,54		
42	FLAT SPRING	17H288	14
43	SQ. HD. SET SCREW	20H257	14
44	HINGE BLOCK	PC.1959	14
45	LOCKING PIN	80H832	14
46	FINGER INCLUDES ITEMS 42, 43, 47, 48 & 55	L.42439	14
47	SPECIAL RIVET	20H313	14
48	SHUNT	L.42427	14
49	SPRING	17H27	14
50	HEX HEAD CAPSCREW	0660V109	14
51	RD HD MACHINE SCREW	0660V122	14
	W/ L W 3616V007 B P W 3612V002		
52	HINGE PIN	19H1904D19	14
53	RD HD MACHINE SCREW	0660V116	14
	W/ L W 3616V007 B P W 3612V002		
54	FINGER BRACKET INCLUDES ITEMS 44 & 52	L.9346	14
55	FINGER TIP	80H835	14
56	SEGMENT SCREW	20H1698	64
57	SET OF SEGMENTS PER LAYOUT K52675		1
	AS FOLLOWS		
	CONTACT SEGMENT	80F386D2	13
	CONTACT SEGMENT	80F386D4	8
	CONTACT SEGMENT	80F386D6	1
	CONTACT SEGMENT	80F386D7	8
58	LOWER DRUM SECTION	L.42336	1
59	CENTER DRUM SECTION	L.8486	1
60	UPPER DRUM SECTION	L.51705	1
61	SHAFT	80F165	1
	W/ S F KEY	20H1375D5	1
62	LEATHEROID ANGLES	80H424	4
63	STAR WHEEL	80F171	1
	W/TAPER PIN	#3X2	1
	HEADLESS SET SCREW	0682V061	1
64	UPPER CAP	80H317	1
65	FELT STRIP 1/8X5/32X3-3/4 IN.		1
66	ROLLER BEARING HYATT 94420	25Z129D5	1
67	FLAT HEAD SCREW	0644V101	4
68	BLOWOUT COIL NOT REQ D FOR A.C.		
69	BLOWOUT LEAD NOT REQ D FOR A.C.		

HARNISCHFEGER CORPORATION — MILWAUKEE 46, WISCONSIN

TROLLEY

ILLUSTRATION CC-1-5

RCS CRANK OPERATED CONTROLLER

BRIDGE

REF. NO.	DESCRIPTION	PART NUMBER	AMOUNT REQUIRED
	CRANE 12362-3		
1	RCS-101R CONTROLLER W/ ARC SHIELDS	L.29617-1	1
	INCLUDES ITEMS 2 TO 67		
2	COVER	L.29620	1
3	LATCH LEVER	6H442	1
4	WOOD HANDLE	6H441F1	1
5	THUMB BUTTON	L.9395	1
6	STUD	20H1631	1
7	PIN FOR LATCH LEVER	19F79D31	1
8	SPRING FOR LATCH LEVER	17T97	1
9	LEVER ONLY	80F113	1
10	LEVER COMPLETE	L.51666	1
	INCLUDES ITEMS 3 TO 9		
11	CAP SCREW	0626V021	1
	LOCKWASHER	3616V008	1
12	WASHER	18H1304	1
13	LEVER BRACKET	80E47	1
14	FL. HD. SCREW FOR BRACKET	3/8X1 IN.	20
15	SPEC. MACH. BOLT	20H723	1
16	LATCH COMPLETE	L.7017	1
	INCLUDES ITEM 17		
17	SPRING	17H313	1
18	HOOK	20H1603	1
19	FL. HD. CAP SCREW	5/16X1 IN.	4
20	TOP PLATE	80E46	1
21	FRAME	80E100	1
22	LATCH FOR COVER	L.980H22	4
23	RD HD MACH SCREW	0660V109	8
24	STEEL PLATE	80F167	1
25	TRANSITE BOARD	80F169	1
26	ARC BARRIERS	80H820	8
	W/ RD HD MACH SCREW	0660V112	16
	LOCKWASHER	3616V007	16
27	THUMB SCREW 3/8 X 1 IN	20H1687D10	2
28	BLOWOUT BRACKET	80F393	2
	W/ RD HD MACH SCREW	0660V111	4
	LOCKWASHER	3616V007	4
	RD HD MACH SCREW	0660V112	2
	LOCKWASHER	3616V007	2
29	BLOWOUT COIL HOLDER	80F394	2
30	PIN	19F47D10	2
31	BLOWOUT STRUCTURE	L.29622	1
	W/OUT COILS AND ARC BARRIERS		
	INCLUDES ITEMS 24, 25, 28, 29, & 30		
32	BLOWOUT PIN	19H822	2
33	CAPSCREW	0626V006	4
	LOCKWASHER	3616V007	4

REF. NO.	DESCRIPTION	PART NUMBER	AMOUNT REQUIRED
34	LOWER CAP	80H318	1
35	FELT STRIP 1/8X5/32X4 IN.		1
36	BALL BEARING SCHATZ MFG. CO.	#2250 TYPE B	1
37	BASE	80E51	2
38	MACH BOLT	0609V061	1
	LOCKWASHER	3616V009	1
	PUNCHWASHER	3612V004	1
39	FINGER BOARD COMPLETE W/17 FINGERS	L.29621	1
	INCLUDES ITEMS 38, 40 TO 55		
40	FINGERBOARD ONLY	80F163	1
41	FINGER COMPLETE		17
	DETAIL ITEMS 45, 46, 49 & 54		
42	FLAT SPRING	17H288	17
43	SQ. HD. SET SCREW	20H257	17
44	HINGE BLACK	PC.1959	17
45	LOCKING PIN	80H832	17
46	FINGER, INCL ITEMS 42,43,47,48,55	L.42439	17
47	SPECIAL RIVET	20H313	17
48	SHUNT	L.42427	17
49	SPR. NG.	17H27	17
50	HEX HD CAP SCREW	0660V109	17
51	RD HD MACH SCREW	0660V122	17
	LOCKWASHER	3616V007	17
	PUNCHWASHER	3612V002	17
52	HINGE PIN	19H1904D19	17
53	RD HD MACH SCREW	0660V116	17
	LOCKWASHER	3616V007	17
	PUNCHWASHER	3612V002	17
54	FINGER BRACKET INCLUDES ITEMS 44 & 52	L.9346	17
55	FINGER TIP	80H835	17
56	SEGMENT SCREW	20H1698	76
57	SET OF SEGMENTS PER LAYOUT 100E411		
	AS FOLLOWS		
	CONTACT SEGMENT	80F386D2	17
	CONTACT SEGMENT	80F386D4	8
	CONTACT SEGMENT	80H386D6	1
	CONTACT SEGMENT	80F386D7	12
58	LOWER DRUM SECTION	L.42336	1
	SMALL LOWER DRUM SECTION	L.51705	1
59	CENTER DRUM SECTION	L.8486	1
60	UPPER DRUM SECTION	L.8486	1
61	SHAFT	80F165	1
	W/S.F. KEY	20H1375D5	1
62	LEATHEROID ANGLES	80H424	4
63	STAR WHEEL	80F171	1
	W/TAPER PIN	#3X2 IN.	1
	HEADLESS SET SCREW	0682V061	1
64	UPPER CAP	80H317	1

REF. NO.	DESCRIPTION	PART NUMBER	AMOUNT REQUIRED
65	FELT STRIP 1/8X5/32X3-3/4 IN.		1
66	ROLLER BEARING HYATT 94420	25Z129D5	1
67	FL HD MACH SCREW	0644V101	4
68	BLOWOUT COIL NOT REQ D FOR A.C.		
69	BLOWOUT LEAD NOT REQ D FOR A.C.		

TYPE R-100R R-101R+R-102R CONTROLLER

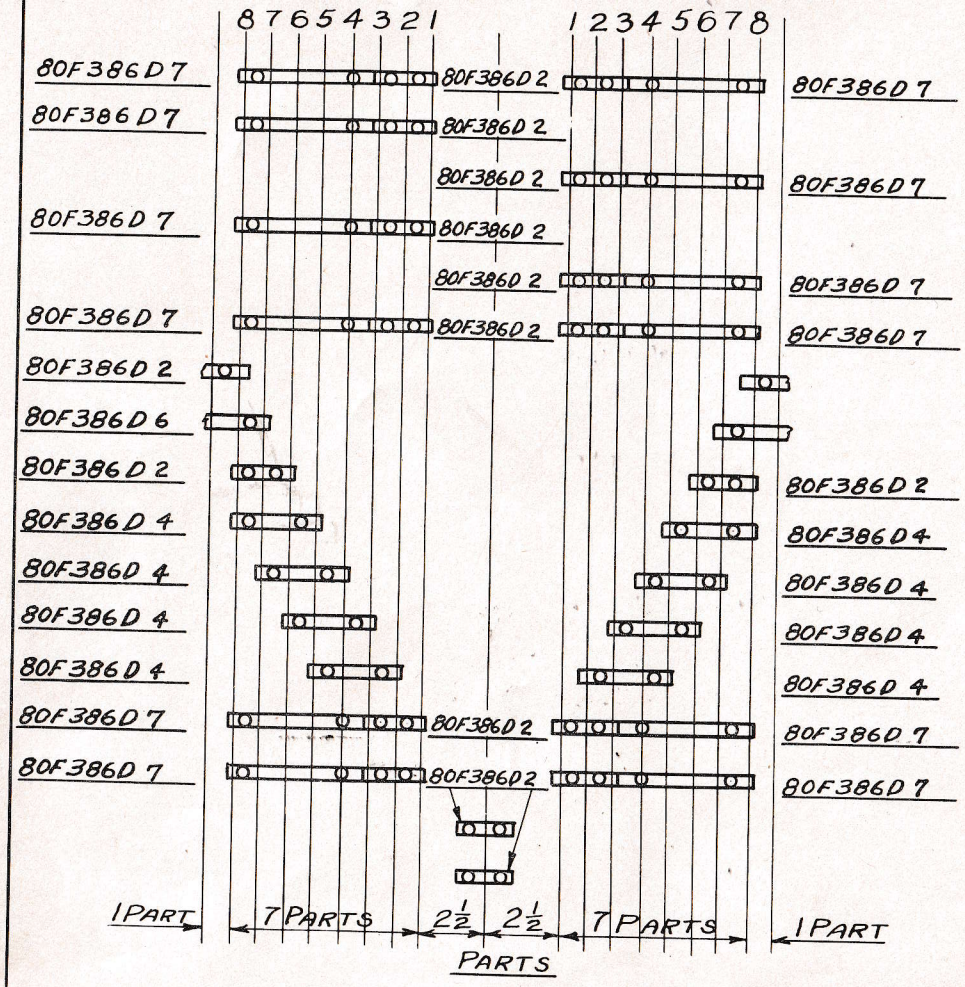

100E411

TYPE R-100R R-101R+R-102R CONTROLLER
LEVER ON THIS END FOR FRONT OPERATED CONTROL

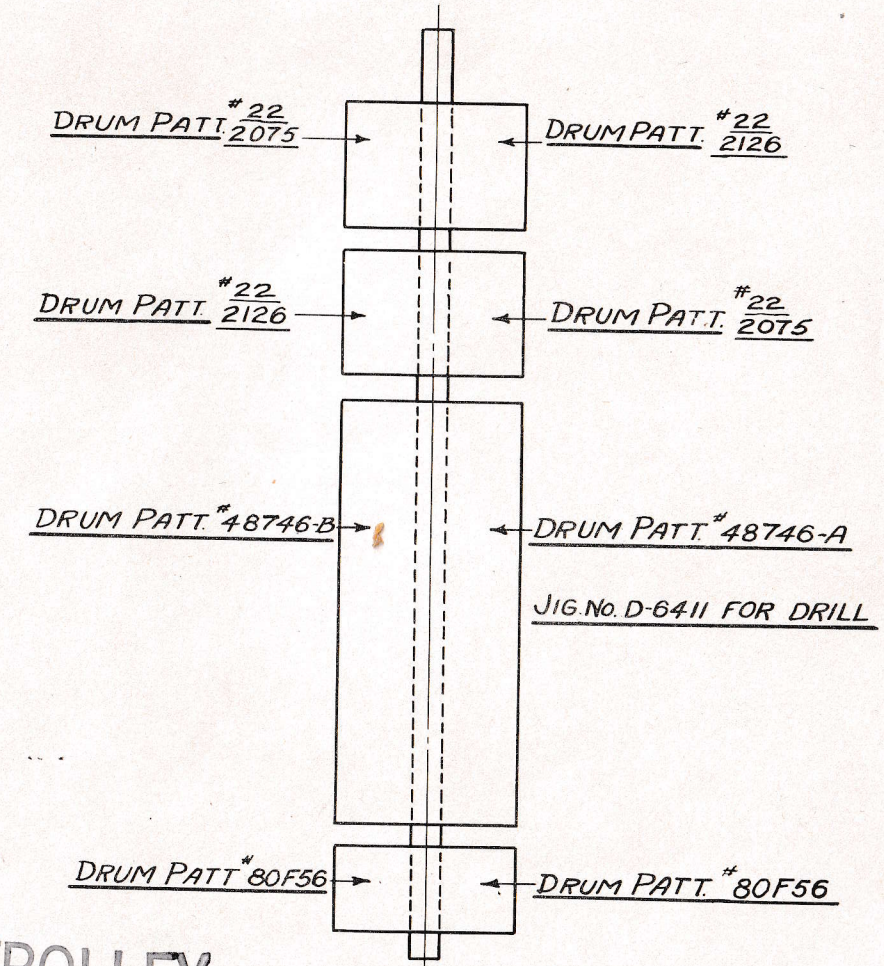

BOTTOM

LEVER ON THIS END FOR REAR OPERATED CONTROLLER

TROLLEY BRIDGE

100E411

TYPE R-100R R-101R+R-102R CONTROLLER

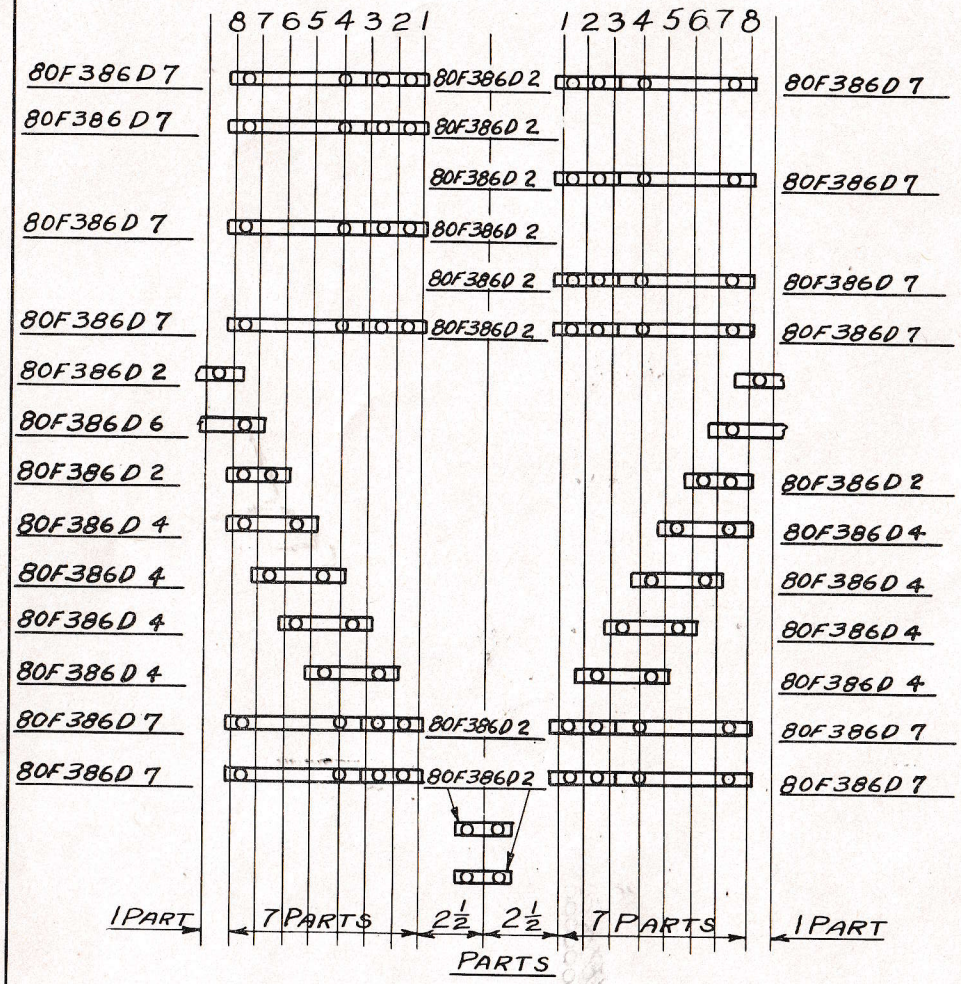

100E411

TYPE R-100R R-101R+R-102R CONTROLLER
LEVER ON THIS END FOR FRONT OPERATED CONTROL

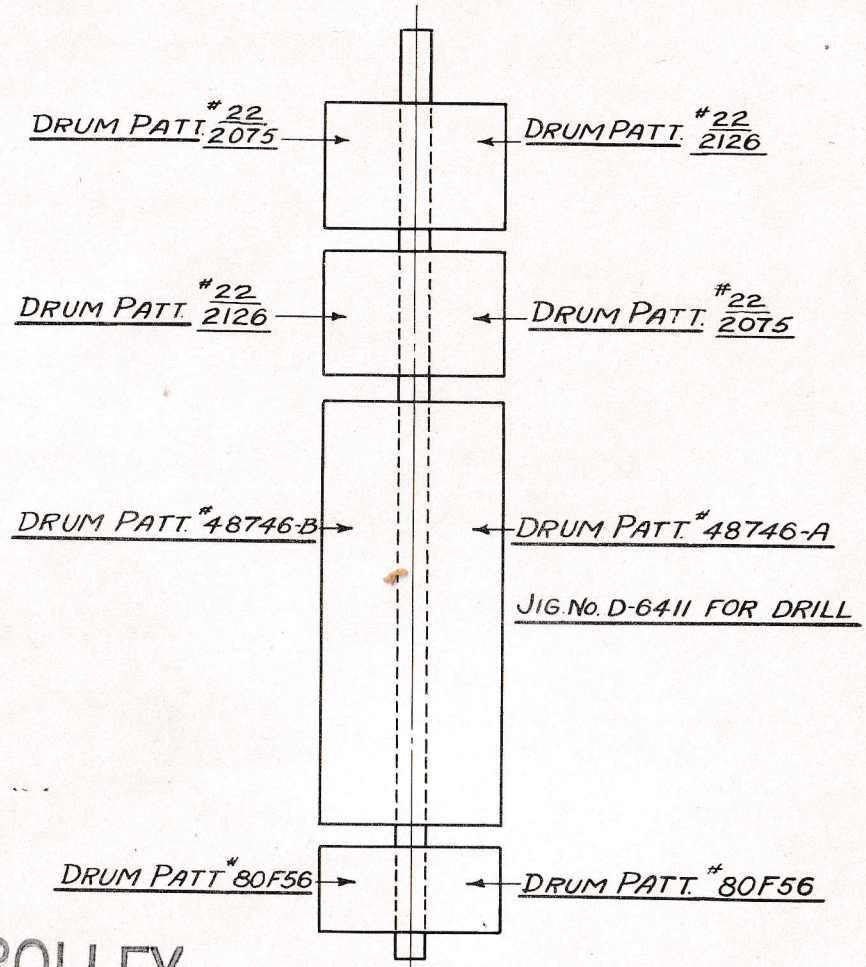

BOTTOM

LEVER ON THIS END FOR REAR OPERATED CONTROLLER

TROLLEY BRIDGE

100E411

ILLUSTRATION CC-13
GRID RESISTANCE BANK

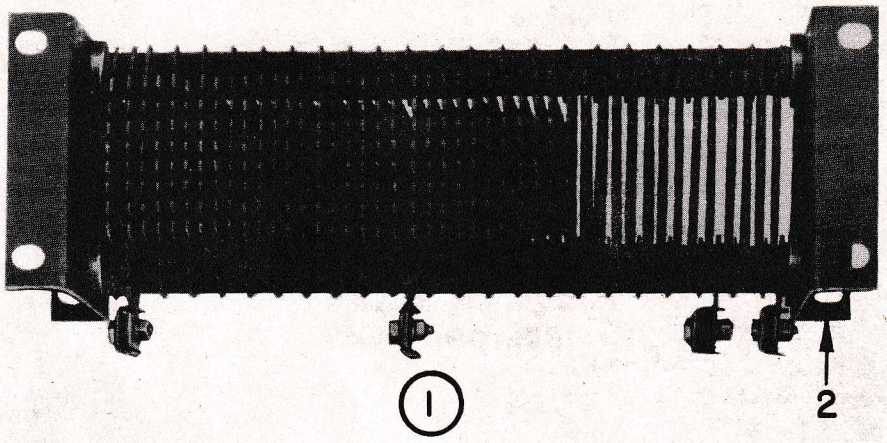

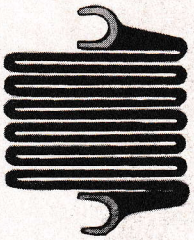
3

4 5 6 7

9

8

10

11

ILLUSTRATION CC-13

GRID RESISTANCE BANK

REF. NO.	DESCRIPTION	PART NUMBER	AMOUNT REQUIRED
	CRANE 12362-3		
	52582-G4 MAIN HOIST RESISTANCE IN 4 BANKS	L 52582	1 -
	42732-G3 BRIDGE RESISTANCE IN 2 BANKS	L 52318	1 -
	42523-G3 TROLLEY RESISTANCE IN 3 BANKS	L 52529	1 -
	52398-G4 AUX HOIST RESISTANCE IN 4 BANKS	L 52398	1 -
	NOTE WHEN ORDERING 1 BANK OF RESISTANCE ONLY, GIVE FULL NAMEPLATE READING OF THAT BANK. THE AMOUNTS AND NUMBER ON GRID, CAN BE DETERMINED FROM THE PROPER RESISTANCE DIAGRAM.		
2	RESISTANCE BOX W/OUT GRIDS	L.42993-1	
	GRID--#1 STAMPED ON LUG	79F1513	
	GRID--#2 STAMPED ON LUG	79F1514	
	GRID--#3 STAMPED ON LUG	80F389	
	GRID--#4 STAMPED ON LUG	80F390	
	GRID--#5 STAMPED ON LUG	80F391	
	GRID--#6 STAMPED ON LUG	80F392	
	GRID--#7 STAMPED ON LUG	79F1515	
	GRID--#8 STAMPED ON LUG	79F1516	
	GRID--#9 STAMPED ON LUG	79F1517	
	GRID--#10 STAMPED ON LUG	79F1518	
	GRID--#11 STAMPED ON LUG	79F1519	
	GRID--LETTER A STAMPED ON LUG	1-41607	
	GRID--LETTER B STAMPED ON LUG	2-41607	
	GRID--LETTER C STAMPED ON LUG	3-41607	
4	ASBESTOS WASHER	18H1088	
5	MICA WASHER 1-3/4 IN. O.D.	PC.917	
	MICA WASHER 1-7/8 IN. O.D.	PC.909	
6	STEEL WASHER	PC.918	
7	TERMINAL CLAMP	L.9339	
8	FRAME	80F90	
9	5/8 IN. ROD W/HEX. NUT, P.W. & L.W.	27K48295 5/8 IN.	
10	MICA TUBE	21K48295	
11	1/2 IN. ROD W/HEX. NUT & L.W.	14K48295 14K48295	

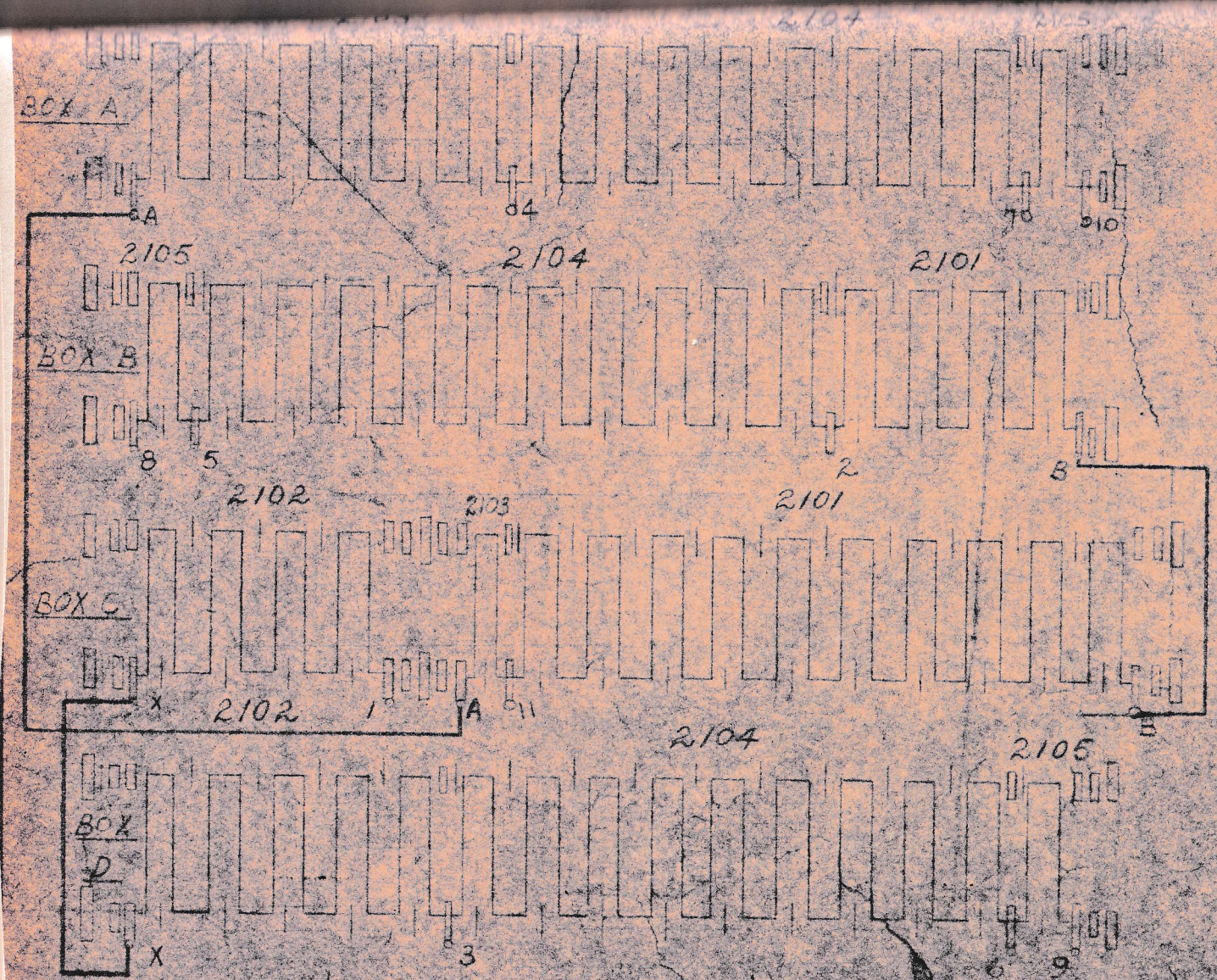

54	2104	GRIDS
14	2103	GRIDS
18	2102	GRIDS
28	2101	GRIDS
3	KS8295	TERMINAL
125	917	MICA WASHERS
9	918	STEEL WASHERS
4	TREAD B	FRAME (LARGE)

STEP	OHMS RES
11-2	4.760
1-3	1.340
11-4	1.134
2-5	1.120
3-6	1.008
4-7	.896
5-8	.784
6-9	.672
7-10	.056

MAIN HOIST

52582

52582-G4 GRID RESISTANCE

HARNISCHFEGER CORPORATION
ELECTRICAL DEPARTMENT

52582

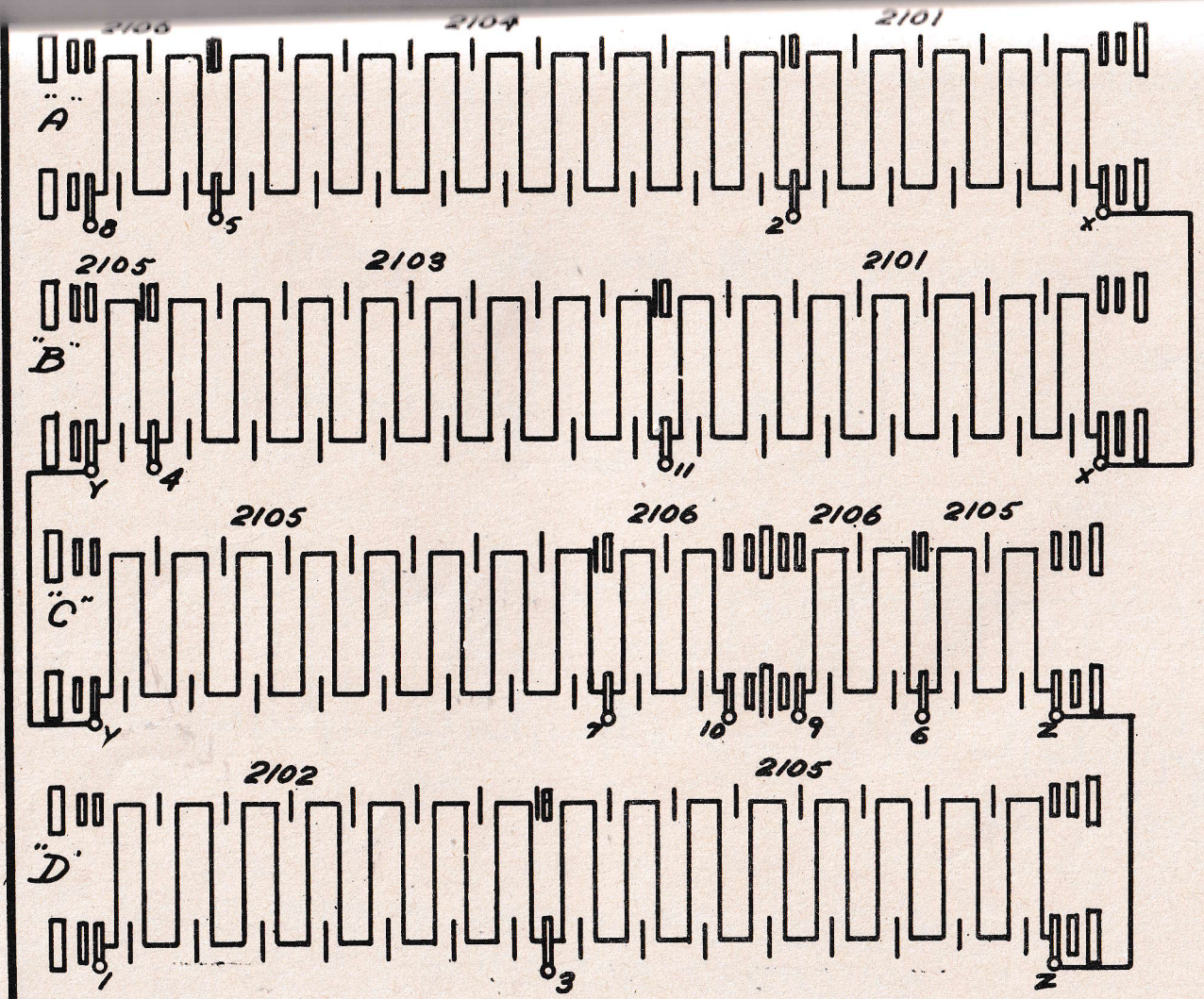

4	1-K48499	FRAME (LARGE)
	1K48500	FRAME (SMALL)
24	2101	GRIDS
14	2102	"
16	2103	"
18	2104	"
38	2105	"
12	2106	"
17	4K48295	TERMINAL
70	917	1 3/4" MICA WASHER
50	909	2 1/8" " "
2	1185	MOLDED W/R PLAIN
	1-S-3776	" "AT ENDS
	5-K48295	FIBER WASHER
21	918	1 1/2" x 1/4" ST WASHER
	7-K48295	5/8" ROD 22 5/8" LG.
		5/8" P WASHER
		5/8" LOCK "
		5/8" NUT
	1-K48295	MICA TUBE 20" LG
	14-K48295	1/2" ROD 21 1/2" LG.
		1/2" NUT

AUX. HOIST

52398 G4 GRID RESISTANCE
R-101 CONTROLLER

RE. DR. BY E.M.J.
CH. BY J.M.C.
APP. BY
APP FOR STD.

HARNISCHFEGER CORPORATION
ELECTRICAL DEPARTMENT
DATE 12-16-41 | 52398 RES.

R4-5-6-42732 CONTROLLER

APP. BY U.M.
APP FOR STD.
DATE
U.M.

42523 RES.

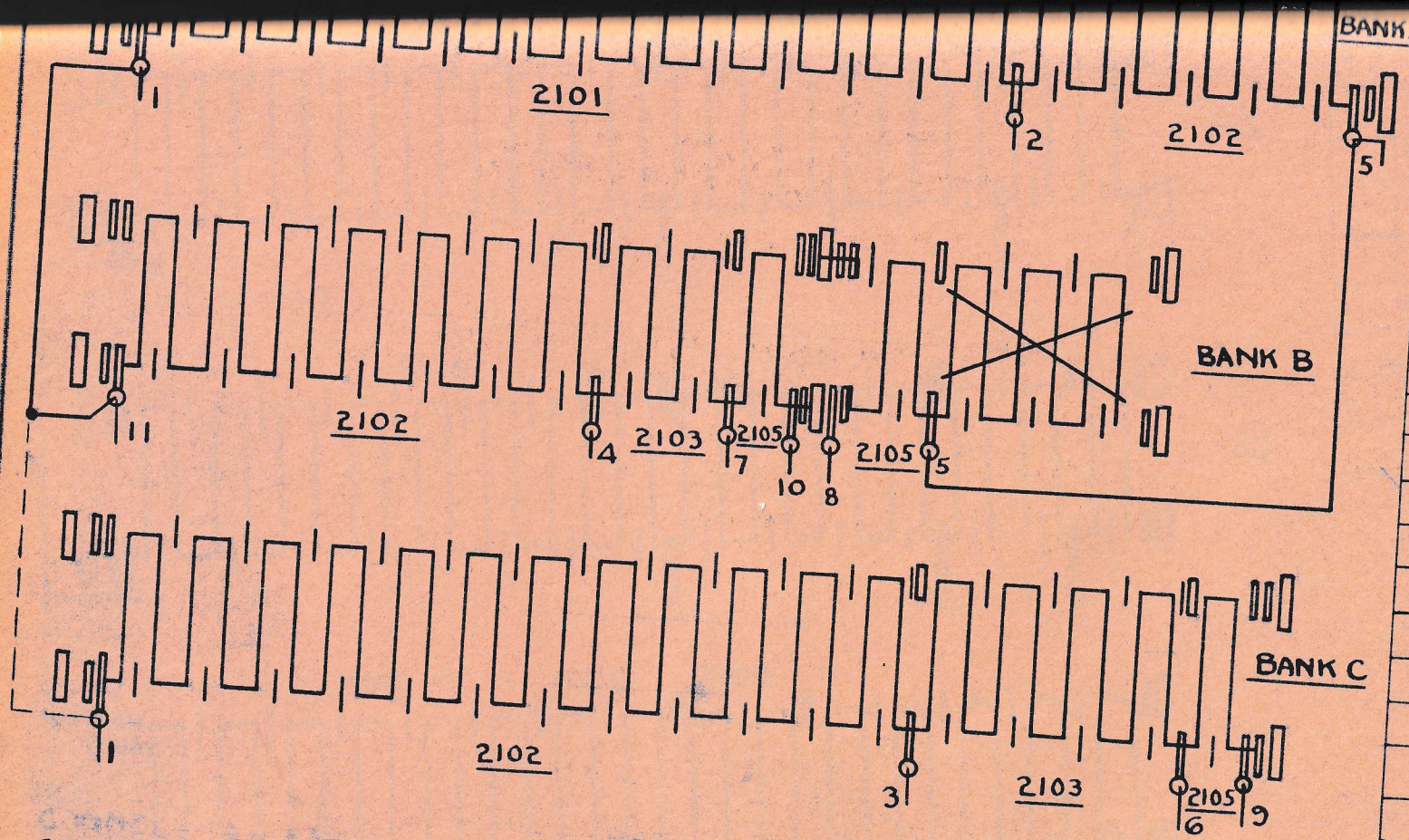

	REQ	P	NAME OF PART
	26	2101	
	48	2102	GRID
	12	2103	GRID
	6	2105	GRID
			GRID
	10	22/2130	TERMINAL SINGLE WIRE (210 210)
		22/2131	TERMINAL SINGLE WIRE (210 211)
	3	22/2133	TERMINAL DOUBLE WIRE (210 210)
		22/2132	TERMINAL DOUBLE WIRE (210 211)
	90	917	MICA WASHER 1 3/4"
		909	MICA WASHER 2 1/8"
	14	1185	EBONY ASB. WASHER 1 1/2"
	12	946	FIBER WASHER 1 3/4"
	30	918	STEEL WASHER 1 1/2"
	12		5/8" PUNCHED WASHER
	12		5/8" LOCK WASHER
	6	943	MICA TUBE
	6	944	5/8" ROD
	12		5/8" NUT
	3	945	1/2" ROD
	6		1/2" NUT
		1214	STEEL WASHER
		1194	TERMINAL

CONNECT 1&11 AS SHOWN IN BROKEN LINES ONLY WHEN CONTROLLER DIAGRAM REQUIRES THIS CONNECTION

STEP	9-6	6-3	3-1	10-7	7-4	4-11	11-2	2-5	5-8		
RES	.086	.648	3.07	.086	.324	1.79	4.42	1.28	.086		

TROLLEY

20 H.P. - 169 V - 61 A - 290 VT.

42523-G3-GRID RESISTANCE

R4-5-6 CONTROLLER

R4-5-6-42732 CONTROLLER

D.M.R. 12-29-43

DR. BY

CH. BY

APP. BY U.M.

APP. FOR STD

DATE

HARNISCHFEGER CORPORATION
ELECTRICAL DEPARTMENT

42523 RES.

MISCELLANEOUS

UNTIRED

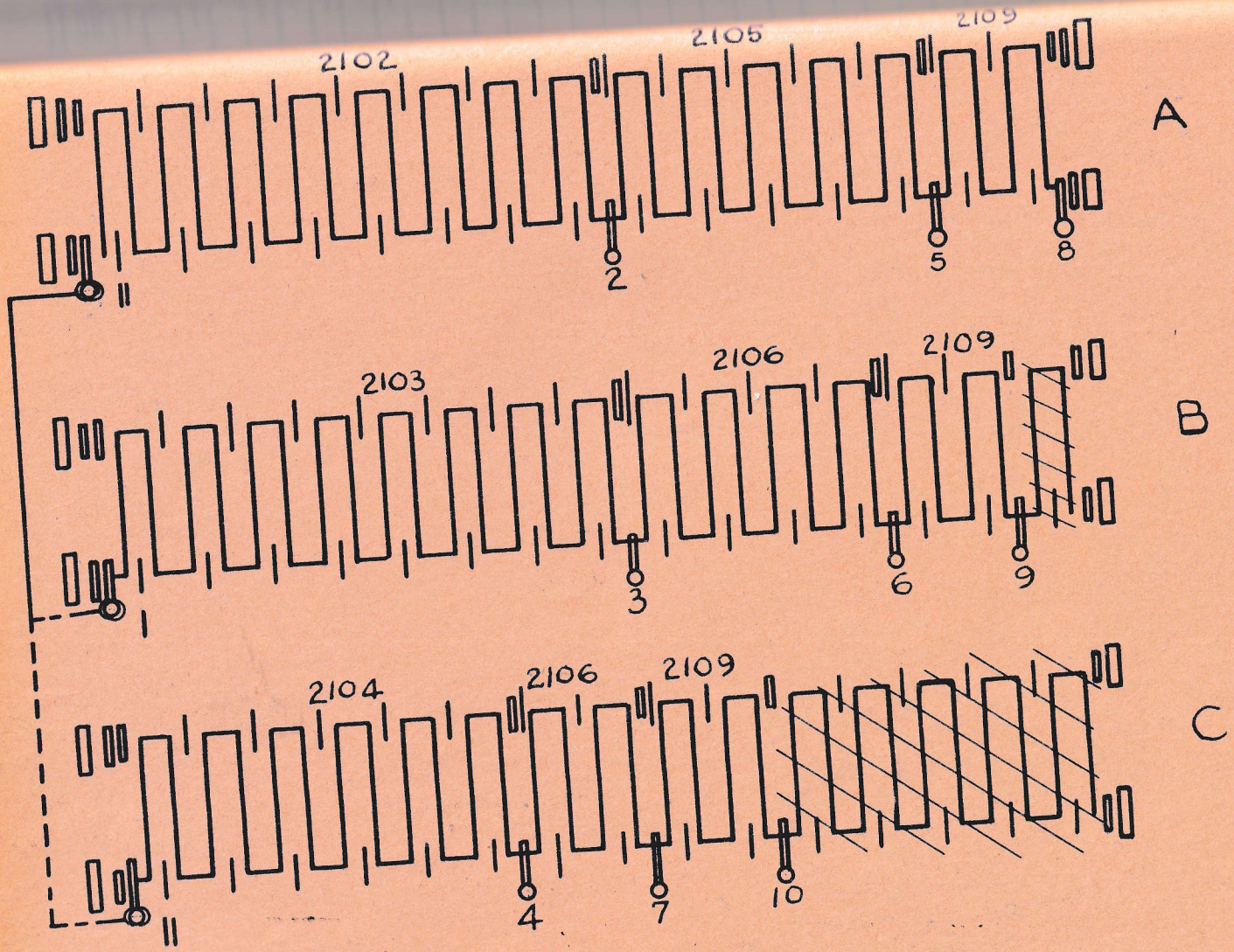

EXTR. DYN. BR.	NO. REQ.	P	NAME OF PART
	16 16	2102 2103	GRID
	12 10	2104 2105	GRID
	12 12	2106 2109	GRID
	12		TERMINAL PC4-K48295
	60	917	MICA WASHER $1\frac{3}{4}$"
	30	909	MICA WASHER $2\frac{1}{8}$"
	12	918	STEEL WASHER $1\frac{1}{2}$"

BRIDGE

CONNECT I&II AS SHOWN IN BROKEN LINES
ONLY WHEN CONTROLLER DIAGRAM REQUIRES
THIS CONNECTION

LIST 42732 & LIST 42828
42732 G3

25196-C

GRID RESISTANCE
R4-5-6-42732 CONTROLLER

DR. BY
CH. BY
APP. BY J.M.
APP. FOR STD.

HARNISCHFEGER CORPORATION
ELECTRICAL DEPARTMENT
TR. D.T.
DATE 3-22-44

42732 RES

ILLUSTRATION CC-25

4 MOTOR A.C. PROTECTIVE AND CONTROL PANELS

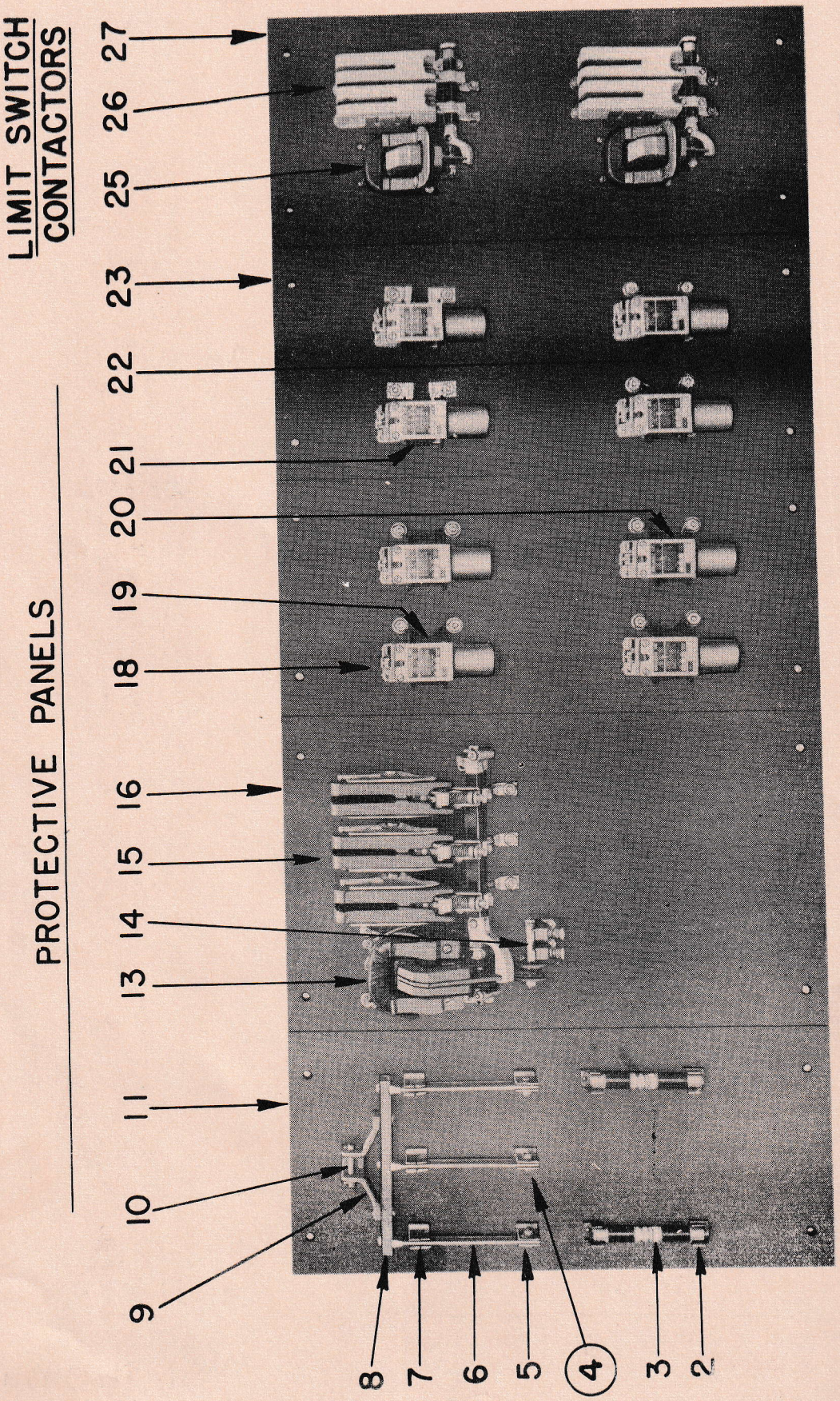

FOUNDED IN 1884 QUALITY P&H SERVICE BY PAWLING & HARNISCHFEGER

ILLUSTRATION CC-25

4 MOTOR A.C. PROTECTIVE AND CONTROL PANELS

REF. NO.	DESCRIPTION	PART NUMBER	AMOUNT REQUIRED
	CRANE 12362-3		
1	KNIFE SWITCH PANEL	L 71481-1	1 -
	INCLUDES ITEMS 2 TO 11		
2	FUSE STUDS	L 44218-1	4 -
	W/COLLAR NUTS	20H3	4
	HEX. JAM NUTS 3/8 IN.	2026V003	4
	PUNCH WASHERS 3/8 IN.	3612V004	4
3	10 AMP 600 VOLT TRICO FUSES		2 -
4	TRUMBULL KNIFE SWITCH BLADE WITH	L 71477-2	3 -
	JAW POST & HINGE POST		
	INCLUDES ITEMS 5,6, & 7		
5	TRUMBULL HINGE POST	R-1260	3 -
6	TRUMBULL KNIFE SWITCH BLADE	R-1392	3 -
7	TRUMBULL JAW POST	R-1164	3 -
8	CROSS BAR	79H578	1 -
9	HANDLE BRACKET	31-44132	1 -
10	PIN	19H25	1 -
	W/ COTTER PINS	2201V031	2 -
11	PANEL ONLY	79F765	1 -
12	MAIN LINE CONTACTOR PANEL	L 71580-1	1 -
	INCLUDES ITEMS 13 TO 16		
13	CONTACTOR COIL	#	1
14	SET N.O. ELECT. INTERLOCKS FOR		
	CH-BULL 9592 NO 401 CONTACTOR		1 -
	SEE PUB NO 7223 FOR DETAILS		
15	CH-BULL 9592 NO 401 3 POLE		1 -
	CONTACTOR		
16	PANEL ONLY	79F871	1 -
17	OVERLOAD RELAY PANEL	L 71458-1	2 -
	INCLUDES ITEMS 18 TO 23		
18	SQUARE D OVERLOAD RELAY	L.71447-1	8
	FOR DETAILS SEE ILLUS. CC-3		
19	TROLLEY RELAY COIL	L 71442-1	2 -
20	BRIDGE RELAY COIL	L 71442-2	2 -
21	MAIN HOIST RELAY COIL	L 71442-2	2 -
22	AUX HOIST RELAY COIL	L 71442-2	2 -
23	PANEL ONLY	1-79F747	1 -
24	MAIN AND AUX HST AND BRIDGE CONTACTOR PANEL	L 71579-1	1 -
	INCLUDES ITEMS 25 TO 27	L.	1
25	CH CONTACTOR COIL		
26	CH BULL 9592 NO 401 W/ BLOWOUTS		
	3 POLE CONTACTOR SEE PUB	7223 NO401	1 -
27	PANEL ONLY	1-79F870	1 -
	PUSH BUTTON STATION	CH-CO 10250H56	1 -
	ADDITIONAL ELECTRICAL APPLICATIONS NOT OF		
	OUR MANUFACTURE MOUNTED ON CRANE		
	SAFETY SWITCH	C-H CO.#4101H	1

IMPORTANT: READ "INSTRUCTIONS" WHEN ORDERING REPAIR PARTS

HARNISCHFEGER CORPORATION

MILWAUKEE 46, WISCONSIN

CC-25

REF. NO.	DESCRIPTION	PART NUMBER	AMOUNT REQUIRED
	PUSH BUTTOM STATION	C-H CO.#10250H	1

IMPORTANT: READ "INSTRUCTIONS" WHEN ORDERING REPAIR PARTS

MAIN LINE
MAIN HOIST
AUX. HOIST
BRIDGE

June, 1953

CUTLER-HAMMER
RENEWAL PARTS
C-H

PUBLICATION NO. 7223

INSTRUCTION SHEET

~~No. 400-2 Pole;~~ No. 401-3 Pole; ~~No. 402-4 Pole; No. 404-5 Pole, No. 599-5 Pole~~ A-c Contactors

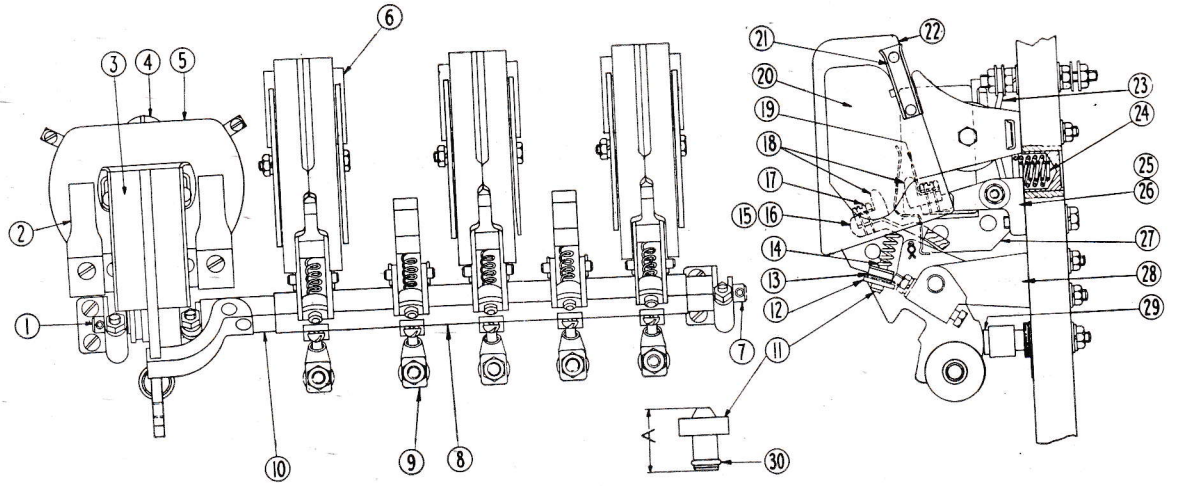

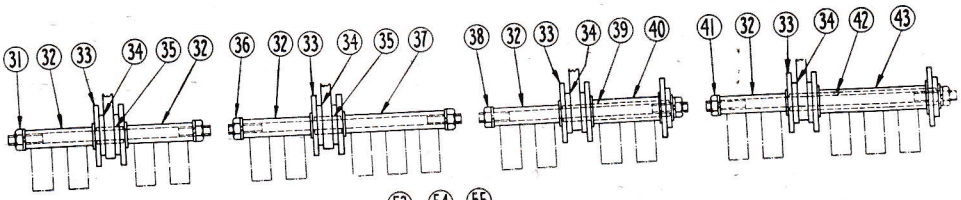

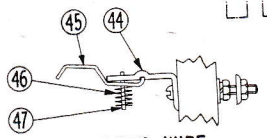

LONG WIPE

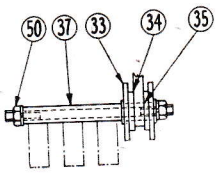

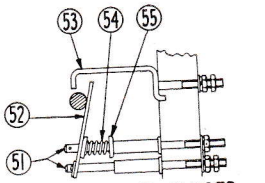

NORMALLY CLOSED ELECTRICAL INTERLOCK

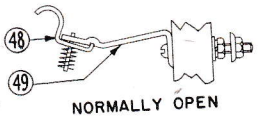

NORMALLY OPEN

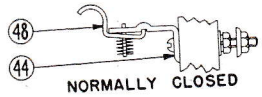

NORMALLY CLOSED

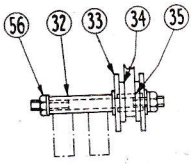

ELECTRICAL INTERLOCK FINGERS & BARS

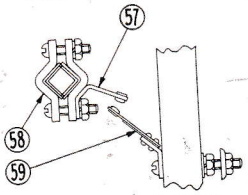

NORMALLY OPEN ELECTRICAL INTERLOCK

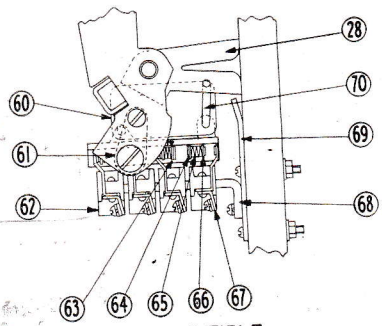

MULTIPLE ELECTRICAL INTERLOCK

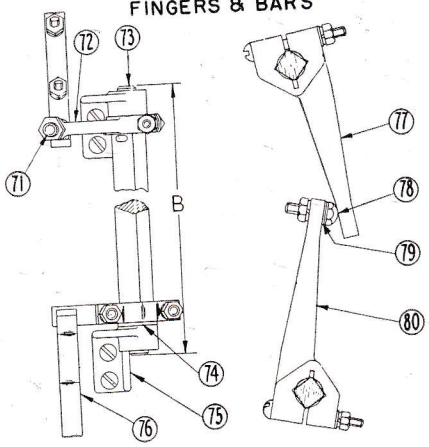

VERTICAL MECHANICAL INTERLOCK

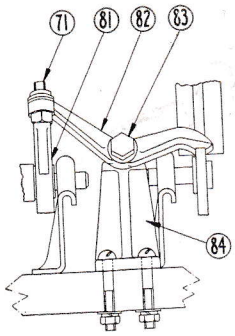

HORIZONTAL MECHANICAL INTERLOCK

D10-56, D10-54, 32995-4, 59891-4, D10-581

INSTALLING SHADING COIL

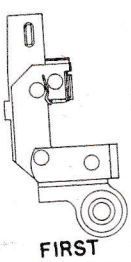

FIRST POSITION

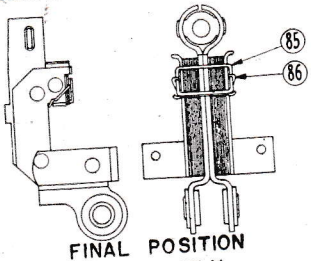

FINAL POSITION IN ASSEMBLY

e in U. S. A.

CUTLER-HAMMER, INC., Milwaukee Wis.

CUTLER-HAMMER RENEWAL PARTS C-H

RENEWAL PARTS—Information Required

Parts CANNOT be sent promptly unless you include the FOLLOWING with your order: PUBLICATION NO. 7223, ITEM NUMBER, DESCRIPTION, PART NUMBER and NO. STAMPED ON CONTROLLER NAME PLATE

Item No.	Description of Part	D10-56 NO. 400 2-POLE CONTACTOR		D10-54 NO. 401 3-POLE CONTACTOR		32995-4 NO. 402 4-POLE CONTACTOR		59891-4 NO. 404 5-POLE CONTACTOR		D10-581 NO. 594 5-POLE CONTACTOR	
		No. Req.	Part No.	No. Req.	Part No.	No. Req.	Part No.	No. Req.	Part No.	No. Req.	Part No.
1	Shaft	1	956-1606	1	956-1606	1	956-1606	1	956-1606	1	956-1606
2	Coil clamp	2	755-5	2	755-5	2	755-5	2	755-5	2	755-5
3	Armature lever	1	624-458	1	624-458	1	624-457	1	624-458	1	624-458
4	Screw	1	.....	1	.....	1	.....	1	.....	1	.....
	For 1" panel	...	911-442	...	911-442	...	911-442	...	911-442	...	911-442
	For 1-1/2" and 2" panel	...	911-455	...	911-455	...	911-455	...	911-455	...	911-455
▲5	Coil (Give No. stamped on coil)	1	.....	1	.....	1	.....	1	.....	1	.....
6	Blowout complete with coil	2	.....	3	.....	4	.....	3	.....	3	.....
	3/4" slate	...	62-26	...	62-26	...	62-26	...	62-26	...	62-26
	1" slate	...	62-26-2	...	62-26-2	...	62-26-2	...	62-26-2	...	62-26-2
	1-1/2" slate	...	62-26-3	...	62-26-3	...	62-26-3	...	62-26-3	...	62-26-3
	2" slate	...	62-26-4	...	62-26-4	...	62-26-4	...	62-26-4	...	62-26-4
7	Shaft	1	956-1607	1	956-1607	1	956-1607	1	956-1607	1	956-1607
8	Insulation	4	.....	4	.....	4	.....	4	.....	4	.....
	4-1/4" long	...	43461-1	...	.....	...	.....	...	.....	...	.....
	6-9/16" long	...	.....	...	1519-279	...	.....	...	.....	...	.....
	6-3/4" long	...	.....	...	1519-344	...	.....	...	.....	...	.....
	7-1/2" long	...	.....	...	1519-93	...	.....	...	.....	...	.....
	9" long	...	.....	...	.....	4	1519-346	...	.....	...	.....
	10-1/16" long	...	.....	...	.....	...	.....	...	1519-422	...	1519-422
	10-3/8" long	...	.....	...	.....	...	.....	...	1519-334	...	.....
9	Connector for finger assembly	2	25-254	3	25-254	4	25-254	5	25-254	5	25-254
10	Shaft (length between bearings)	1	.....	1	.....	1	.....	1	.....	1	.....
	6-1/4" long	...	656-84	...	.....	...	.....	...	.....	...	.....
	8-7/16" long	...	.....	...	656-69	...	.....	...	.....	1	.....
	9-1/16" long	...	.....	...	25165-1 Fig. 10	...	.....	...	.....	...	.....
	9-5/8" long	...	.....	...	656-88	...	.....	...	.....	...	.....
	11-27/64" long	...	.....	...	.....	...	656-95	...	.....	...	.....
	11-15/16" long	...	.....	...	.....	...	.....	...	656-141	...	656-141
	12-1/4" long	...	.....	...	.....	...	.....	...	656-89	...	25165-1 Fig. 10
	13-15/16" long	...	.....	...	.....	...	.....	...	.....	...	.....
11	Adjusting pin (see dimension "A" on Page 1)							3	13-600	...	.....
	A =51/64"	*	13-600	*	13-600	*	13-600	2	13-601	5	13-601
	A =11/16"	*	13-601	*	13-601	*	13-601	2	49-234	5	49-234
12	Spring support	2	49-234	3	49-234	4	49-234	3	For 2nd 4th poles 49-234-2 For 1st, 3rd, and 5th Poles		
13	Shim Washers							*	16-320	*	16-320
	1/64" thick	*	16-320	*	16-320	*	16-320	*	916-174	*	916-174
	1/32" thick	*	916-174	*	916-174	*	916-174	5	69-142	5	69-142
▲14	Spring	2	69-142	3	69-142	4	69-142	3	40-100-2 For 1st, 3rd and 5th poles		
15	Lever assembly (Includes Items 11, 12, 13, 14, 17 and 18)	...	.....	...	.....	...	.....	...	.....		
								2	40-100-9 For 2nd and 4th poles		
16	Lever assembly (Includes Items 11, 12, 13, 14, 17, and 18) (see dimension "A" on Page 1)	2	.....	3	.....	4	.....	...	.....	5	.....
	"A" =51/64"	...	40-100	...	40-100	...	40-100	...	.....	...	.....
	"A" =11/16"	...	40-100-9	...	40-100-9	...	40-100-9	...	911-5446FZ	10	911-5446FZ
17	Screw	4	911-5446FZ	6	911-5446FZ	8	911-5446FZ	10	.....	...	.....
‡▲18	Contact			...	.....	...	.....	...	1321-841	...	1321-841
	Plain copper		1321-841		1321-841		1321-841		.....		.....
	Silver faced	...	23-812	...	23-812	...	23-812	...	49-197	5	49-197
19	Guard	2	49-197	3	49-197	4	49-197	3			
20	Pole piece	4	962-44	6	962-44	8	962-44	6	962-44	6	962-44
21	Guide	4	919-1874	6	919-1874	8	919-1874	6	919-1874	6	919-1874
▲22	Arc shield	2	673-65	3	673-65	4	673-65	3	673-65	3	673-65
23	Blowout coil	2	Give No. on Coil	3	Give No. on Coil	4	Give No. on Coil	3	Give No. on Coil	5	Give No. on Coil
24	Springs										
	Large	1	969-482	1	969-482	1	969-482	1	969-482	1	969-482
	Small	1	969-488	1	969-488	1	969-488	1	969-488	1	969-488
25	Contact bracket with pin for use with blowout	2	79-257-2	3	79-257-2	4	79-257-2	3	79-257-2	3	79-257-2
26	Contact bracket with pin and stud for use without blowout	2	79-258-9	3	79-258-9	4	79-258-9	2	79-258-9	2	79-258-9
	For 3/4" and 1" panel	...	.....	...	.....	...	.....	...	.....	...	.....
	For 1-1/2 an 2" panel	...	.....	...	.....	...	.....	...	.....	...	.....
27	Magnet frame	1	.....	1	.....	1	.....	1	.....	1	.....
	25 cycle	...	17-317	...	17-317	...	649-333	...	17-317	...	17-317
	60 cycle	...	17-317-2	...	17-317-2	...	649-412	...	17-317-2	...	17-317-2
28	Bracket	3	679-371	3	679-371	3	679-371	3	679-371	3	679-371
29	Wood stop and cup	1	28960-1 Fig. 6	1	28960-1 Fig. 6	1	28960-1 Fig. 6	1	28960-1 Fig. 6	1	28960-1 Fig. 6
30	Spring ring	2	29-531	3	29-531	4	29-531	5	29-531	5	29-531

(CONTINUED ON PAGE 3)

‡Silver faced contacts are used only where the contacts remain closed for long periods, (nominally eight hours or more). Do not use silver faced contacts [illegible] tactor was so equipped originally.

*Quantity is "as required".

▲We recommend that these items be stocked. The quantity to be stocked will depend upon the total number in use.

(CONTINUED FROM PAGE 2)

Item No.	Description of Part	D10-56 NO. 400 2-POLE CONTACTOR		D10-54 NO. 401 3-POLE CONTACTOR		32995-4 NO. 402 4-POLE CONTACTOR		59891-4 NO. 404 5-POLE CONTACTOR		D10-581 NO. 599 5-POLE CONTACTOR	
		No. Req.	Part No.	No. Req.	Part No.	No. Req.	Part No.	No. Req.	Part No.	No. Req.	Part No.
31	Electrical interlock bar complete. Sides of bar not insulated from each other. (Includes Items 32, 33, 34 and 35)	*	23-945-3	*	23-945-3	*	23-945-3	*	23-945-3	*	23-945-3
32	Interlock contact tube	*	29-440	*	29-440	*	29-440	*	29-440	*	29-440
33	Large insulating washer	*	4416-883	*	4416-883	*	4416-883	*	4416-883	*	4416-883
34	Small Insulating washer	*	4416-881	*	4416-881	*	4416-881	*	4416-881	*	4416-881
35	Insulating tube	*	4429-61	*	4429-61	*	4429-61	*	4429-61	*	4429-61
36	Electrical interlock bar complete. Sides of bar not insulated from each other (Includes Items 32, 33, 34, 35 and 37)	*	23-945	*	23-945	*	23-945	*	23-945	*	23-945
37	Interlock contact tube	*	29-442	*	29-442	*	29-442	*	29-442	*	29-442
38	Electrical interlock bar complete. Sides are insulated from each other. (Includes Items 32, 33, 34, 39 and 40)	*	23-948	*	23-948	*	23-948	*	23-948	*	23-948
39	Insulating tube	*	4429-164	*	4429-164	*	4429-164	*	4429-164	*	4429-164
40	Interlock contact tube	*	29-458	*	29-458	*	29-458	*	29-458	*	29-458
41	Electrical interlock bar complete. Sides are insulated from each other. (Includes Items 33, 34, 35, 42, and 43)	*	23-948-6	*	23-948-6	*	23-948-6	*	23-948-6	*	23-948-6
42	Insulating tube	*	4429-212	*	4429-212	*	4429-212	*	4429-212	*	4429-212
43	Interlock contact tube	*	29-460	*	29-460	*	29-460	*	29-460	*	29-460
44	Normally closed finger support	*	879-88	*	879-88	*	879-88	*	879-88	*	879-88
45	Long wipe contact finger	*	48469-1	*	48469-1	*	48469-1	...	.....	...	.....
46	Spring	*	969-552	*	969-552	*	969-552	*	969-552	*	969-552
47	Spring guide	*	919-1873	*	919-1873	*	919-1873	*	919-1873	*	919-1873
48	Interlock contact finger	*	740-22	*	740-22	*	740-22	*	740-22	*	740-22
49	Normally open finger support	*	879-89	*	879-89	*	879-89	*	879-89	*	879-89
50	Electrical interlock bar complete (Includes Items 33, 34, 35 and 37)	*	23-946	*	23-946	*	23-946	*	23-946	*	23-946
51	Post	...	.....	...	.....	2	918-439	...	.....	...	.....
52	Contact finger	...	.....	...	.....	1	1340-8	...	.....	...	.....
53	Contact post	...	.....	...	.....	1	1318-63	...	.....	...	.....
54	Spring	...	.....	...	.....	1	969-616J	...	.....	...	.....
55	Cup washer	...	.....	...	.....	2	916-561Z	...	.....	...	.....
56	Electrical interlock bar complete (Includes Items 32, 33, 34 and 35)	*	23-946-6	*	23-946-6	*	23-946-6	*	23-946-6	*	23-946-6
57	Movable contacts	...	.....	1	679-239	1	679-239	1	679-239	1	679-239
58	Clamp										
	Front half	...	.....	1	55-804	1	55-804	1	55-804	1	55-804
	Back half	...	.....	1	955-51	1	955-51	1	955-51	1	955-51
59	Stationary contacts	...	.....	2	640-189	2	640-189	2	640-189	2	640-189
60	Bearing plate	1	20-394	1	20-394	1	20-394	1	20-394	..	.....
61	Bracket	1	79-1480	1	79-1480	1	79-1480	1	79-1480	...	.....
62	Normally open contact block with contacts	*	17-1711-2	*	17-1711-2	*	17-1711-2	*	17-1711-2	...	.....
63	Contact bracket	1	.....	1	.....	1	.....	1	.....	1	.....
	4 identical slots	...	79-1276	...	79-1276	...	79-1276	...	79-1276	...	.....
	3 identical slots and 1 long slot	...	79-1276-2	...	79-1276-2	...	79-1276-2	...	79-1276-2	...	.....
64	Spring gland	*	49-1236	*	49-1236	*	49-1236	*	49-1236	...	.....
65	Spring	*	69-886	*	69-886	*	69-886	*	69-886	...	.....
66	Contact	*	21-491	*	21-491	*	21-491	*	21-491	...	.....
67	Normally closed contact block with contacts	*	17-1711	*	17-1711	*	17-1711	*	17-1711	...	.....
68	Mounting bracket	1	79-1271	1	79-1271	1	79-1271	1	79-1271	...	.....
69	Strap	1	19-367	1	19-367	1	19-367	1	19-367	...	.....
70	Link	1	26-148	1	26-148	1	26-148	1	26-148	..	.....
71	Adjusting screw	1	911-479	1	911-479	1	911-479	...	.....	...	.....
72	Lever	1	3424-727F1	1	3424-727F1	1	3424-727F1	...	.....	...	.....
73	Shaft (see dimension "B" on Page 1)	1	.....	1	.....	1	.....	1	.....	...	.....
	"B" =11-7/16"	...	956-1723	...	956-1723	...	956-1723	...	956-1723	...	.....
	"B" =9-7/16"	...	13-771	...	13-771	...	13-771	...	13-771	...	.....
74	Washer	1	816-1005	1	816-1005	1	816-1005	...	.....	...	.....
75	Bearing	2	3220-181F1	2	3220-181F1	2	3220-181F1	...	.....	...	.....
76	Lever	3	24-1450	3	24-1450	3	24-1450	...	.....	...	.....
77	Lever	...	.....	...	.....	...	.....	...	.....	1	3424-789F1
78	Adjusting screw	...	.....	...	.....	...	.....	...	.....	1	911-479
79	Shim washers	...	.....	...	.....	...	.....	...	.....	1	916-174
80	Lever	...	.....	...	.....	...	.....	...	.....	1	3424-789F2
81	Lever	1	3424-746F1	1	3424-746F1	1	3424-746F1	...	.....	...	.....
82	Lever	1	3424-775F1	1	3424-775F1	1	3424-775F1	...	.....	...	.....
83	Pin	1	913-1082	1	913-1082	1	913-1082	...	.....	...	.....
84	Bracket	1	3279-928F2	1	3279-928F2	1	3279-928F2	...	.....	...	.....
85	Shading coil										
	25 cycles	1	9-550-29-2	1	9-550-29-2	1	9-550-29-4	1	9-550-29-2	1	9-550-29-2
	60 cycles	2	9-550-29	2	9-550-29	1	9-550-29-3	2	9-550-29	2	9-550-29
86	Spring	1	69-755	1	69-755	1	69-754	1	69-755	1	69-755
	Set of contacts, springs, etc., consisting of items 14, 17, 18 and 19	*	6-111-4	*	6-111	*	6-111-2	*	6-111-5	*	6-111-5

...tity is "as required".

...ecommend that these items be stocked. The quantity to be stocked will depend upon the total number in use.

INSTRUCTIONS

HOW TO REMOVE THE OPERATING COIL

Disconnect the panel from the line by means of the service switch. Remove the cotter pin and wood stop (Item No. 29) from stop assembly, so that armature lever (Item No. 3) will drop to an open position. Remove clamp screws, coil clamps (Item No. 2) and disconnect wire leads. Move magnet coil away from magnet frame (Item 27), tilt upward and pull out. To install the the magnet coil reverse these operations.

WHEN TO RENEW THE CONTACTS

Inspect the contacts (Item No. 18) at regular intervals. They should be renewed before they are badly worn. Disconnect the panel from the line and move the armature lever (do not move the shaft) so it touches the magnet frame in order to place the contacts in their closed position. When the distance of the contacts, from back to back, shown as "A" in Fig. 1, is reduced to 1-7/16" this indicates that the contacts no longer have the proper wiping action. It is then advisable to remove and renew the entire set of contacts.

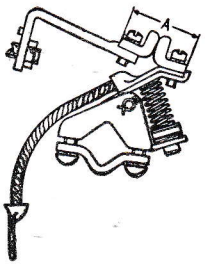

Fig. 1

Renew the electrical interlock fingers (item 45 or 46) before they wear thru at the tips.

ADJUSTMENT

When the interlock contact tubes, items 32, 37, 40 and 43 become worn, a new contact surface may be presented to the fingers by loosening the nuts and turning the tubes until a new surface is presented.

Smooth the contacts with a fine file if they become rough or pitted.

CARE

1—Lubricate the armature lever shaft and the auxiliary interlock fingers regularly with a small amount of clean vaseline.

2—Renew the arc shields (Item 22) before they are burned sufficiently to allow the arc to touch the blowout pole pieces (Item 20).

3—Mercury timers can be used with these contactors. See Publication No. 6306 for the timers.

ILLUSTRATION CC-3
MAGNETIC OVERLOAD RELAYS

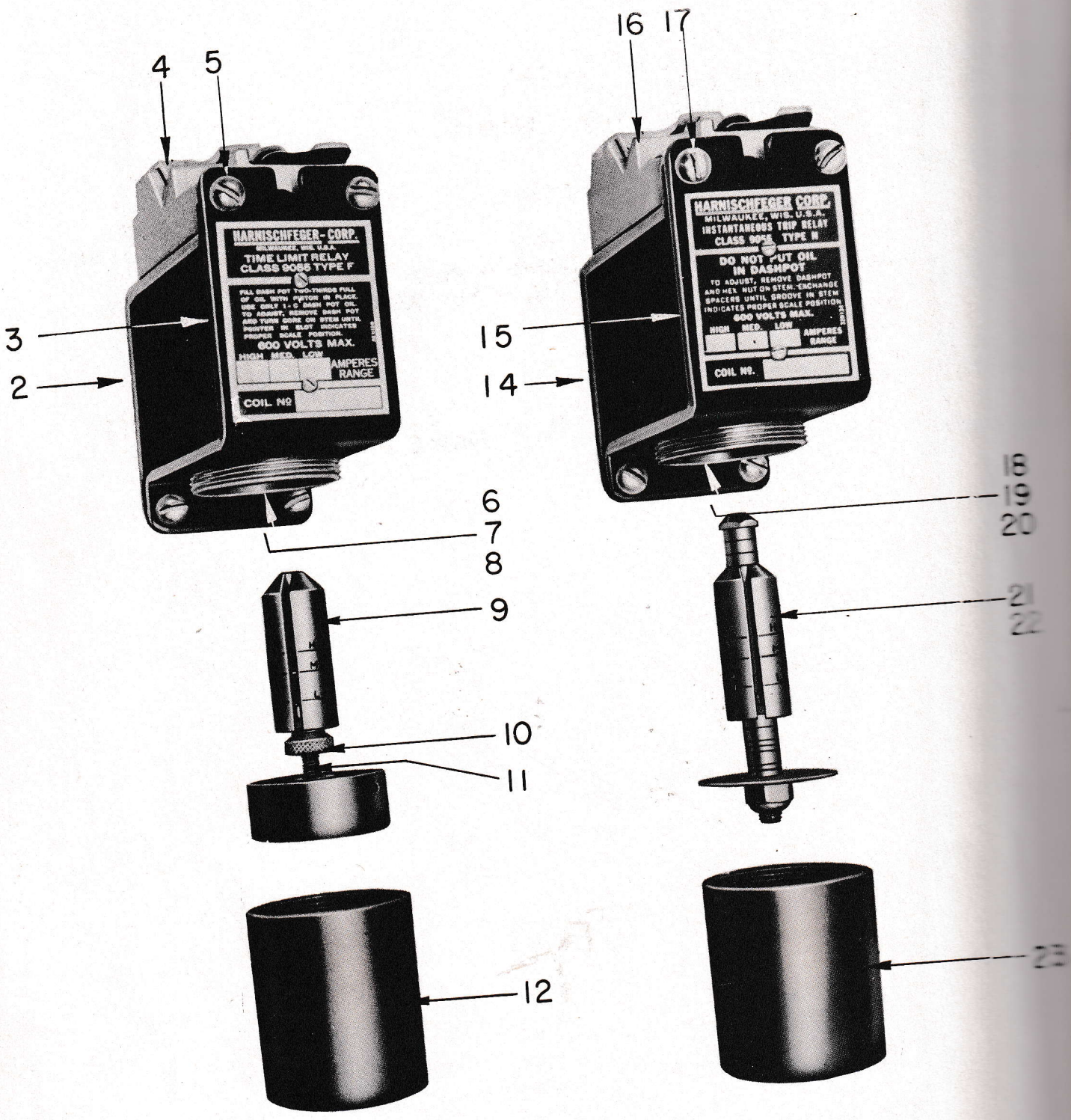

ILLUSTRATION CC-3-2

MAGNETIC OVERLOAD RELAYS FOR A C

REF. NO.	DESCRIPTION	PART NUMBER	AMOUNT REQUIRED
	CRANE 12362-3		
1	TIME RELAY W/OUT COIL	L 71447-1	1
	INCLUDES ITEMS 2 THRU 12		
2	UPPER FRAME SQ D	750-D2-G1	1
3	LOWER FRAME SQ D	750-D3-G1	1
4	CONTACT ASSEMBLY N C SQ D	750-C10-G2	1
5	RD HD MACH SCREW	10-24X5/8 IN	4
6	TRIP PIN - NOT SHOWN - SQ D	750-X68	1
7	INSULATING TUBE - NOT SHOWN - SQ D		
8	INSULATING WASHER FOR COIL - NOT SHOWN SQ D	153-D1-X6A	2
9	PLUNGER SQ D	750-G4	1
10	LOCK NUT SQ D	160-D1-X5	1
11	PISTON AND STEM SQ D	750-D15-G1	1
12	DASH POT SQ D	750-D71-X1	1
	BOTTLE 1-C DASH OIL SQUARE D CO		1

HARNISCHFEGER CORPORATION
MILWAUKEE 14, WISCONSIN

ADJUSTMENT OF MAGNETIC OVERLOAD RELAYS

MAGNETIC OVERLOAD RELAYS ARE OF TWO TYPES; TIME LIMIT AND INSTANTANEOUS TRIP.

ADJUSTMENT: TIME LIMIT RELAY

EACH RELAY HAS A RATING PLATE WITH THE AMPERAGE VALUES AT LOW, MEDIUM, AND HIGH SETTINGS INDICATING THE CAPACITY OF THE RELAY WHEN THE DISC ON THE BRASS PLUNGER ROD IS IN LINE WITH THE L, M, OR H STAMPING ON THE PLUNGER.

TO DETERMINE THE CORRECT POSITION OF THE DISC ON THE PLUNGER ROD IN RELATION OF THE SOLENOID PLUNGER ON ANY GIVEN INSTALLATION, PROCEED AS DIRECTED BELOW:

A. TAKE FULL LOAD AMPERE RATING FROM MOTOR NAME PLATE.

B. ON AC OR SERIES REVERSING DC MOTORS ADD 15 PERCENT TO FULL LOAD RATING. SELECT PROPER LOCATION O THE DISC ON PLUNGER ROD BY COMPARIFNG AMPERAGE REQUIREMENTS OF THE MOTOR WITH THE AMPERAGE RATING UNDER L, M OR H ON THE RATING PLATE, AND SET THE DISC TO CORRESPOND WITH THAT LOCATION ON THE SOLENOID PLUNGER.

C. ON DC DYNAMIC BRAKE CIRCUITS THE PROCEDURE IS AS DESCRIBED ABOVE, BUT 50 PERCENT IS ADDED TO AMPERE RATINGS ON MOTOR NAME PLATE AND THE RELAY IS SET ACCORDINGLY.

TWO ADJUSTMENTS MUST BE CONSIDERED:

1. PROPER AMPERAGE RAT NG
2. PROPER TIMING

TO ADJUST FOR AMPERE RATING: SLACK KNURLED LOCK NUT ON PLUNGER ROD ND ROTATE SOLENOID PLUNGER UNTIL DISC ON PLUNGER ROD IS IN CORRECT OCATION IN RELATION TO THE STAMPING L,M OR H. THEN TIGHTEN LOCK UT SO ADJUSTMENT WILL NOT CHANGE DURING THE COURSE OF OPERATION.

TO ADJUST FOR PROPER TIMING: DASHPOT PISTON ASSEMBLY HAS TWO HOLES F DIFFERENT SIZES DRILLED IN THE PISTON HEAD. THE SPEED OF OPERATION F THE RELAY IS CONTROLLED BY ROTATING VALVE DISC WHICH MAY BE SET;

1. FOR FASTER SPEED: BOTH HOLES OPEN
2. FOR MEDIUM SPEED: LARGE HOLE OPEN: SMALL CLOSED
3. FOR SLOW SPEED: SMALL OPEN: LARGE CLOSED

OTE: DO NOT CLOSE OFF BOTH HOLES OR UNIT WILL NOT OPERATE

INOR VARIATIONS FROM EXACT AMPERAGE RATING MAY BE EXPECTED; THERE-ORE, IN SOME CASES IT MAY BE NECESSARY TO SET THE RELAY SLIGHTLY; BOVE THE AMPERAGE RATING DETERMINED FROM THE MOTOR NAME PLATE RATING; OWEVER, IN THE LIMIT RELAY, THIS SHOULD NOT BE DONE UNTIL THE PEED ADJUSTMENT HAS BEEN REGULATED TO CONTROL MOMENTARY OVERLOADS.

REFER TO LLUSTRATION CC-3 FOR REPAIR PARTS

J-L46

OIL LEVEL:
TIME LIMIT RELAY: DASHPOT MUST BE 2/3 FULL WITH CORE AND PISTON IN PLACE IN DASHPOT.
USE ONLY DASHPOT OIL FOR FILLING

ADJUSTMENT: INSTANTANEOUS TRIP RELAY

THE SAME PROCEDURE AS DESCRIBED FOR TIME RELAY IN DETERMINING THE SETTING ON THE SOLENOID PLUNGER ROD IN RELATION TO THE PLUNGER IS FOLLOWED FOR THE INSTANTANEOUS RELAY BUT THE METHOD OF ADJUSTMENT IS DIFFERENT.
ADJUSTMENT IS MADE BY MOVING NUT FROM THE END OF THE BRASS PLUNGER ROD AND INTERCHANGING SPACER ABOVE AND BELOW THE PLUNGER UNTIL THE NOTCH ON THE PLUNGER ROD IS IN PROPER POSITION.

REFER TO ILLUSTRATION CC-3 FOR REPAIR PARTS

ILLUSTRATION CC-11
SWITCHBOARD CABINET

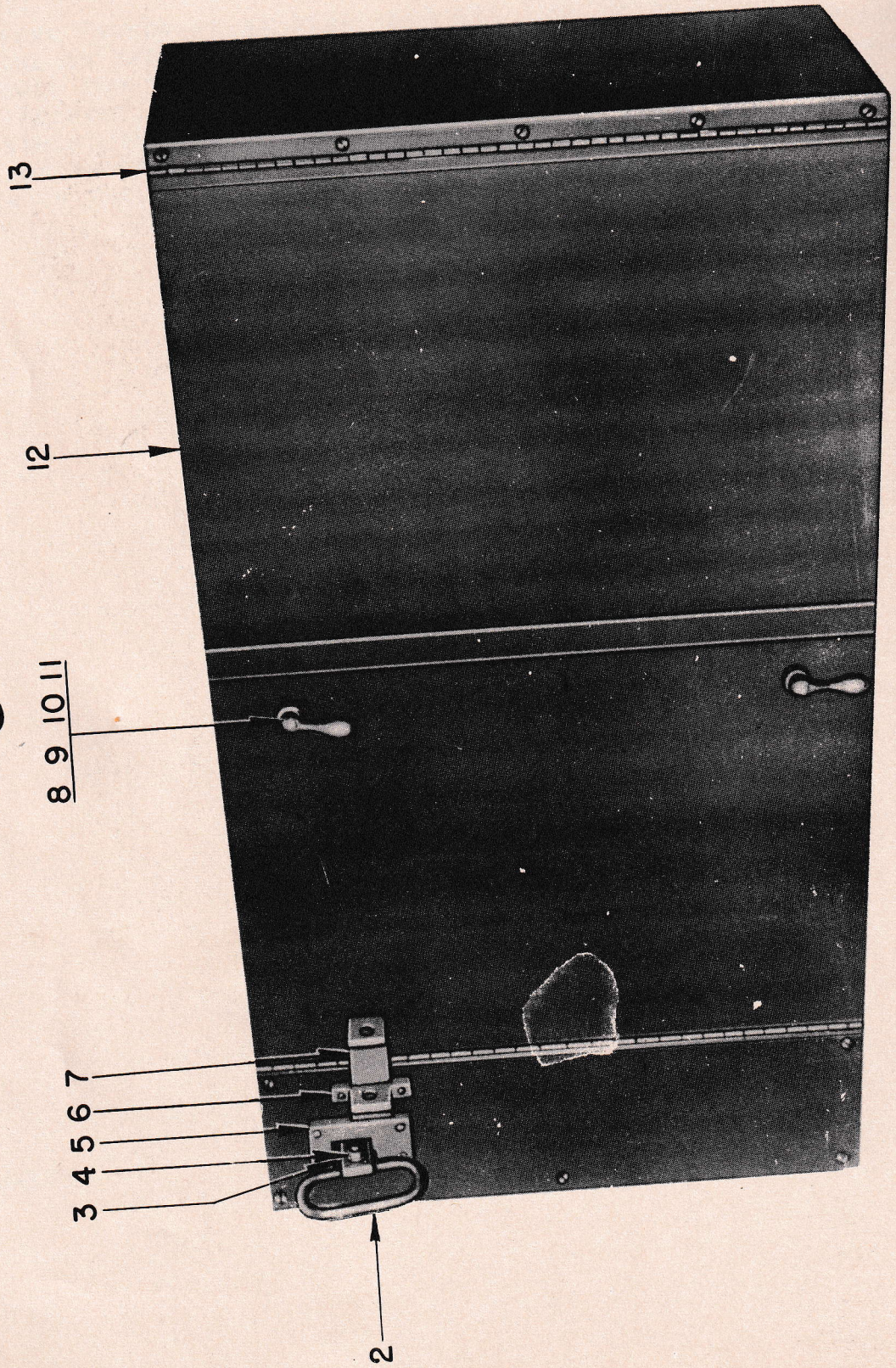

HARNISCHFEGER CORPORATION MILWAUKEE 46, WISCONSIN

ILLUSTRATION CC-11-2

A.C. SWITCHBOARD CABINET

REF. NO.	DESCRIPTION	PART NUMBER	AMOUNT REQUIRED
	CRANE 12362-3		
1	SWITCH BOARD CABINET INCLUDES ITEMS 2 TO 13	L.29083-2	1
2	HANDLE	9-44131	1
3	BAR	4-44131	1
4	H.H. CAP SCREW	3/8X1-1/2 IN.	1
5	BRACKET	12-44131	1
6	BRACKET	10-44131	1
7	LOCKING BAR	6-44133	1
8	HANDLE	7-44134	2
9	LATCH BAR	1-44134	2
10	SPRING	PC.457	2
11	PIN 3/8X2 IN. LG.		1
12	CABINET ONLY	K54382	1
13	PIANO HINGE 1-1/2X26-3/4 IN. LG.		2

ILLUSTRATION CC-6
TYPE "HB" LIMIT SWITCH

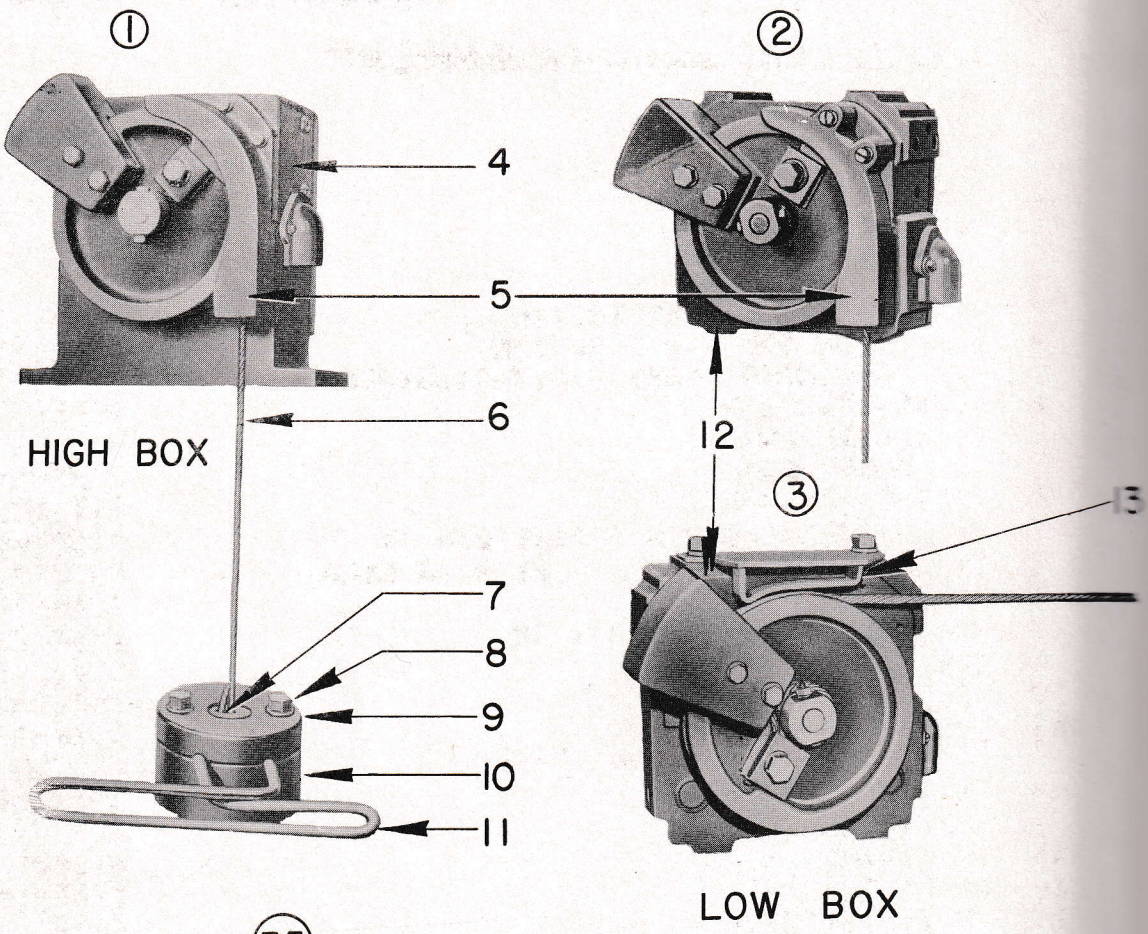

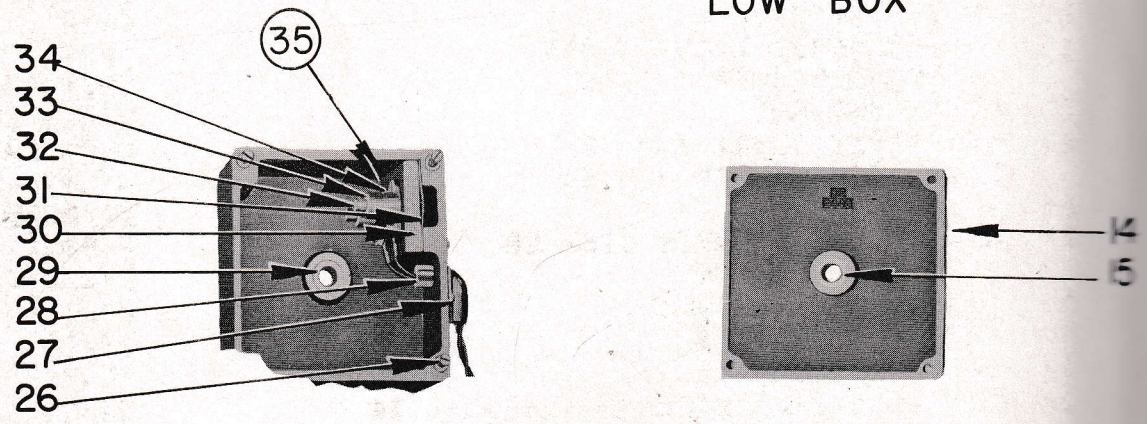

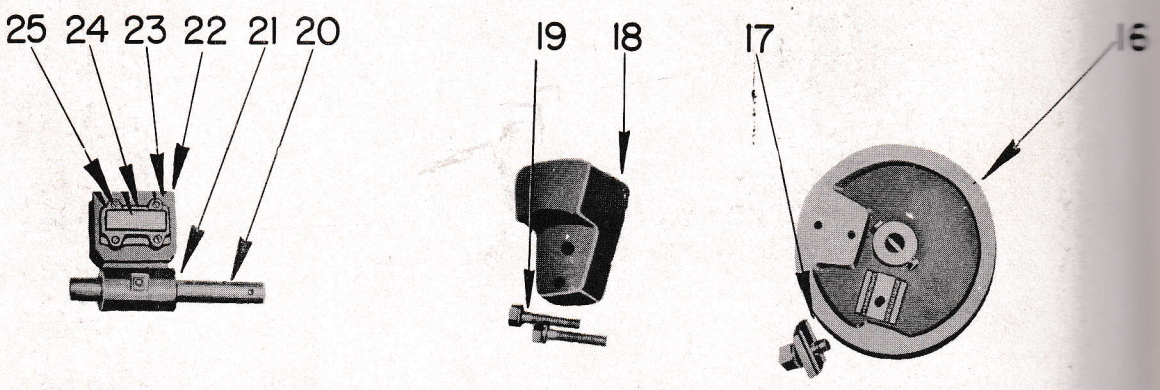

ILLUSTRATION CC-6-4

TYPE HB LIMIT SWITCH R.H.HIGH BOX

REF. NO.	DESCRIPTION	PART NUMBER	AMOUNT REQUIRED
	CRANE 12362-3		
1	R.H. HIGH BOX LIMIT SWITCH	L.34412	1
	INCLUDES ITEMS 4,5,7-10,14-35		
4	SWITCH BOX R H	79F1575-F1	1
	W/ITEM 29		1
	DOWEL PIN	19F79D29	2
5	ROPE GUARD R H	79F1542	1
	W/H.H. CAP SCREW 5/16X2-1/4 IN	0626V028	2
6	TILLER ROPE 1/4 IN X 7 FT 0 IN LONG	TYPE 2	1
7	ROPE WEDGE	8T93	1
8	H.H. CAPSCREW 1/2X-3/4 IN	0626V080	2
9	CAP	79F1511	1
10	WEIGHT	79F1545	1
11	GUIDE ROD MAIN HOIST	79H605	1
	GUIDE ROD AUX HOIST	79H606	1
14	SWITCH BOX COVER	14F1255F1	1
	W/ITEM 15		1
15	BUSHINH	5H1480	1
16	WHEEL R H	79E726-D1	1
17	ROPE CLIP	8H33	1
	W/CAPSCREW 1/2X1 1/4IN	0626V078	1
	LOCK WASHER 1/2 IN	3615V011	1
18	COUNTERWEIGHT	10-35308	1
19	CAP SCREW 3/8X2-1/4 IN	0626V046	2
	W/ LOCK WASHER 3/8 IN	3616V009	2
20	SHAFT	10H5072	1
21	ARM. R.H. INCLUDES ITEM 20	L.9051	1
22	INSULATINH PLATE	79H1092	2
23	INSULATING BUSHING	PC.1858	4
24	CARBON CONTACT	73H303	1
25	CARBON HOLDER	79H792	1
26	RD. HD. MACH. SCREW 5/16X1-1/4 IN	0660V134	4
	W/ LOCK WASHER 5/16 IN	3616V008	4
27	CONDUIT COVER	2-44143	1
28	RUBBER BUSHING	5H19	1
29	BUSHING FOR SWITCH BOX	5T1648	1
30	INSULATING BASE	79H1093	1
31	FIBRE PLATE	PC.1863	1
32	PLUG	PC.1861	2
33	SPRING	17H282	2
34	CONTACT BRACKET	79H791	2
35	CONTACT BASE COMPLETE	L.8949	1
	INCLUDES ITEMS 30 TO 34		

L-55065

INSTRUCTION SHEET—Bulletin 10316 Geared Limit Switch

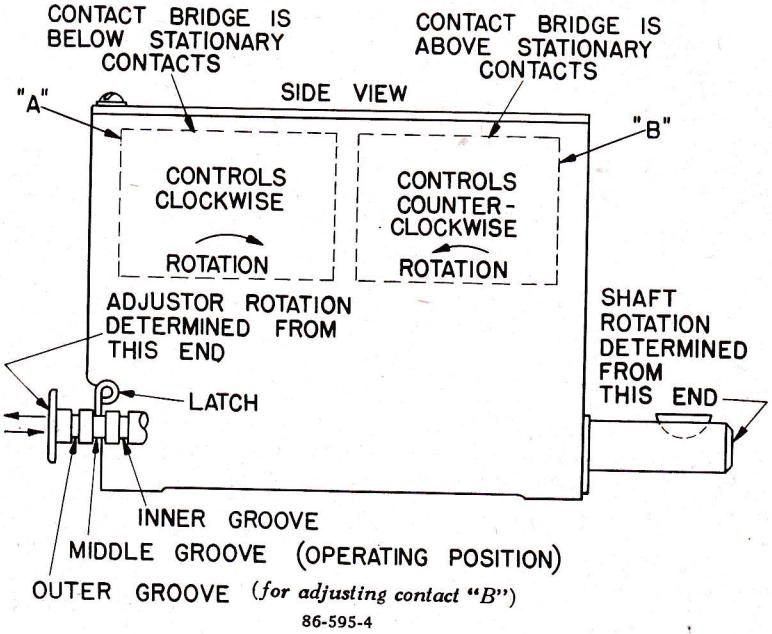

86-595-4

This limit switch is a factory assembled and adjusted device, and should be replaced, if replacements or service are required beyond those listed below.

RENEWAL PARTS

When ordering Renewal Parts give this **PUBLICATION NO. 9255, ITEM NO., DESCRIPTION, PART NO. and COMPLETE NAME-PLATE DATA ON THE DEVICE.**

	Description of Part	No. Required	Part No.
CONTACT "A" 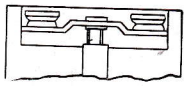 MOVABLE CONTACTS BELOW STATIONARY CONTACTS	Complete contact unit assembly—(Contact bridge is **below** stationary contacts)	1	17–1403
CONTACT "B" 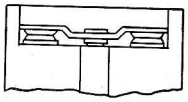 MOVABLE CONTACTS ABOVE STATIONARY CONTACTS	Complete Contact unit assembly—(Contact bridge is **above** stationary contacts)	1	17–702

ADJUSTMENT

Couple the limit switch to the mechanism to be controlled. Remove the switch cover. See illustration above.

TO SET CONTACT "A"

Contact "A" is opened by the clockwise rotation of the adjustor, and the clockwise rotation of the main shaft.

1. Drive the machine to its end of travel in the direction which turns the adjustor clockwise.
2. Adjust the "A" contact to open at this position. Proceed as follows:

(a) Lift up the latch and pull out the adjustor so that the latch will engage the inner groove.

(b) **If the contacts are closed,** turn the adjustor clockwise until the contacts open.

(c) **If the contacts are open,** turn the adjustor counter-clockwise until the contacts just close, and then slowly turn back until the contacts are fully opened.

(d) Lift up the latch and push in the adjustor so the latch engages the middle groove which is the operating position. (THIS IS IMPORTANT)

INSTRUCTION SHEET—Bulletin 10316 Geared Limit Switch (Continued)

TO SET CONTACT "B"

Contact "B" is opened by the counter-clockwise rotation of the adjustor, and the counter-clockwise rotation of the main shaft.

1. Drive the machine to its end of travel in the direction which turns the adjustor counter-clockwise.

2. Adjust the "B" contact to open at this position. Proceed as follows:

   (a) Lift up the latch and push the adjustor in so that the latch will engage the outer groove.

   (b) **If the contacts are closed,** turn the adjustor counter-clockwise until the contacts open.

   (c) **If the contacts are open,** turn the adjustor clockwise until the contacts just close, and then slowly turn back until the contacts are fully opened.

   (d) Lift up the latch and pull out the adjustor so the latch engages the middle groove which is the operating position. (THIS IS IMPORTANT)

Make trial runs in each direction. Additional final adjustments may be required to compensate for drift. Follow the procedure described above. Replace the cover when adjustments have been completed.

One turn of the adjustor corresponds to 1⅛ turns of the main shaft.

CARE

The silver contacts do not require filing or dressing. When the contact material has almost worn away, replace the contact assembly.

LUBRICATION

Standard Enclosure—

The gear running surfaces may be lubricated with a few drops of Dow Corning DC200 Silicon Oil or equivalent applied thru the holes in the base plates, which support the electrical contact assemblies. If the limit switch is operated daily a few drops every month should be sufficient.

Lubricate the shaft bearings thru the oil holes with Dow Corning DC200 Silicon Oil or equivalent.

MAIN SHAFT TURNS BETWEEN LIMITS
Maximum 100; Minimum ½

ILLUSTRATION CC-53

LIMIT SWITCH APPLICATION (ON HOIST SHAFT)

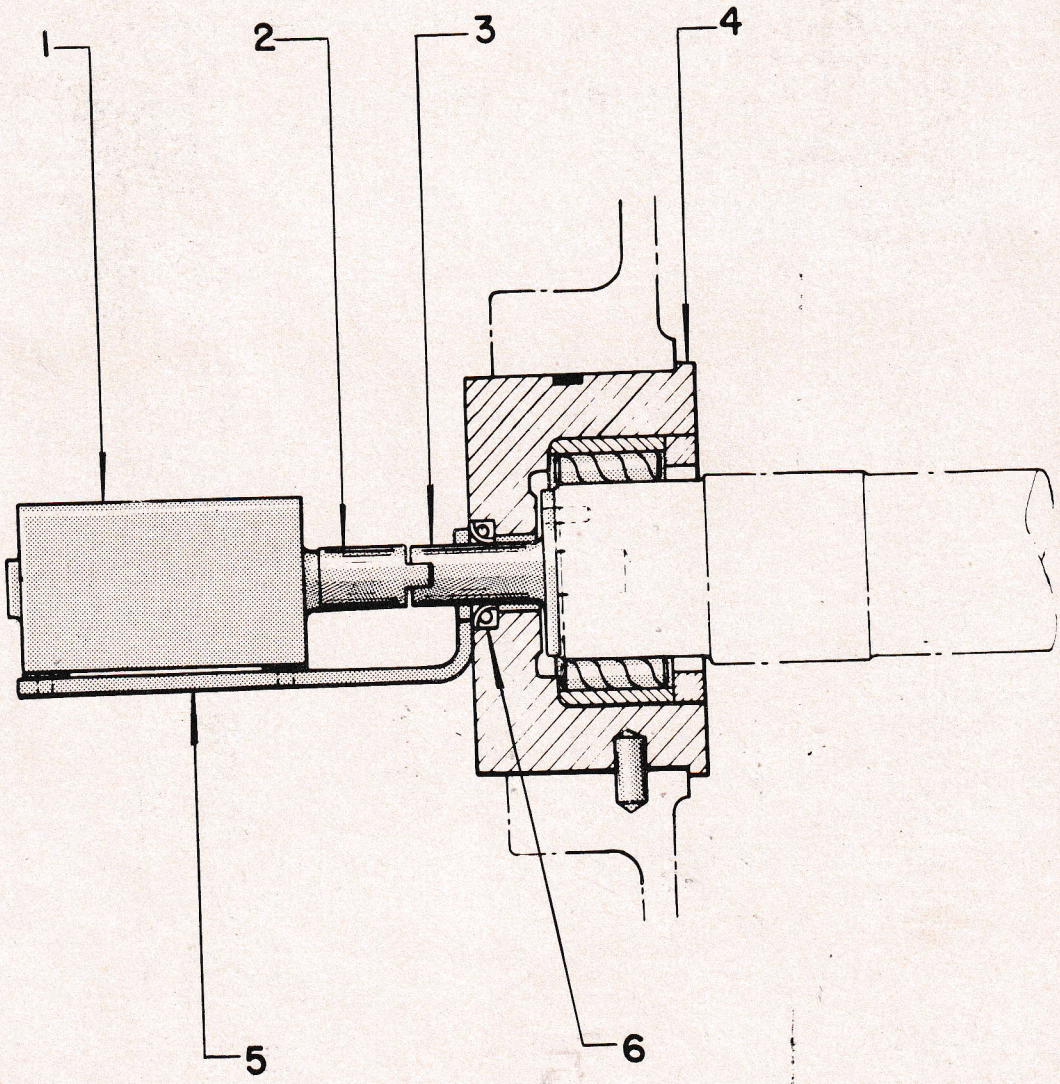

HARNISCHFEGER CORPORATION MILWAUKEE 46, WISCONSIN

ILLUSTRATION CC-53

LIMIT SWITCH APPLICATION ON HOIST SHAFT

MAIN HOIST

REF. NO.	DESCRIPTION	PART NUMBER	AMOUNT REQUIRED
	CRANE 12362-3		
1	LIMIT SWITCH	79Z24	1 -
2	JAW HEAD	19H1264	1
3	JAW SHAFT	19H1411	1 -
4	BEARING ASSEMBLY		1
	SEE DRAWING 100A1168		
5	LIMIT SWITCH BRACKET	P1 2 34-79E311	1 -
	W/ MACHINE BOLT 1/2 IN X 1 IN	0609V110	2 -
	HEX NUT 1/2 IN	2045V005	2 -
	LOCKWASHER 1/2 IN	3615V011	2 -
6	NOT USED		

IMPORTANT: READ "INSTRUCTIONS" WHEN ORDERING REPAIR PARTS

HARNISCHFEGER CORPORATION — MILWAUKEE 46, WISCONSIN

ILLUSTRATION CC-53

LIMIT SWITCH APPLICATION
ON HOIST SHAFT

AUX. HOIST

REF. NO.	DESCRIPTION	PART NUMBER	AMOUNT REQUIRED
	CRANE 12362-3		
1	LIMIT SWITCH	79Z24	1
2	JAW HEAD	19H1264	1
3	NOT USED		
4	BEARING ASSEMBLY		1
	FOR DETAILS SEE ILL CHU4-4		
5	LIMIT SWITCH BRACKET	6-79E318	1
	W/MACH. BOLT 1/4X4 IN.	0610V016	2
	HEX. NUT 1/4 IN.	2036V007	2
	LOCK WASHER 1/4 IN.	3616V007	2
	CAP SCREW 1/2 X 1 IN	0626V080	2
	LOCK WASHER 1/2 IN.	3615V011	2
6	OIL SEAL PERFECT	18F681D27	1

IMPORTANT: READ "INSTRUCTIONS" WHEN ORDERING REPAIR PARTS

ILLUSTRATION CC-4

SHOE COLLECTOR FOR TROLLEY

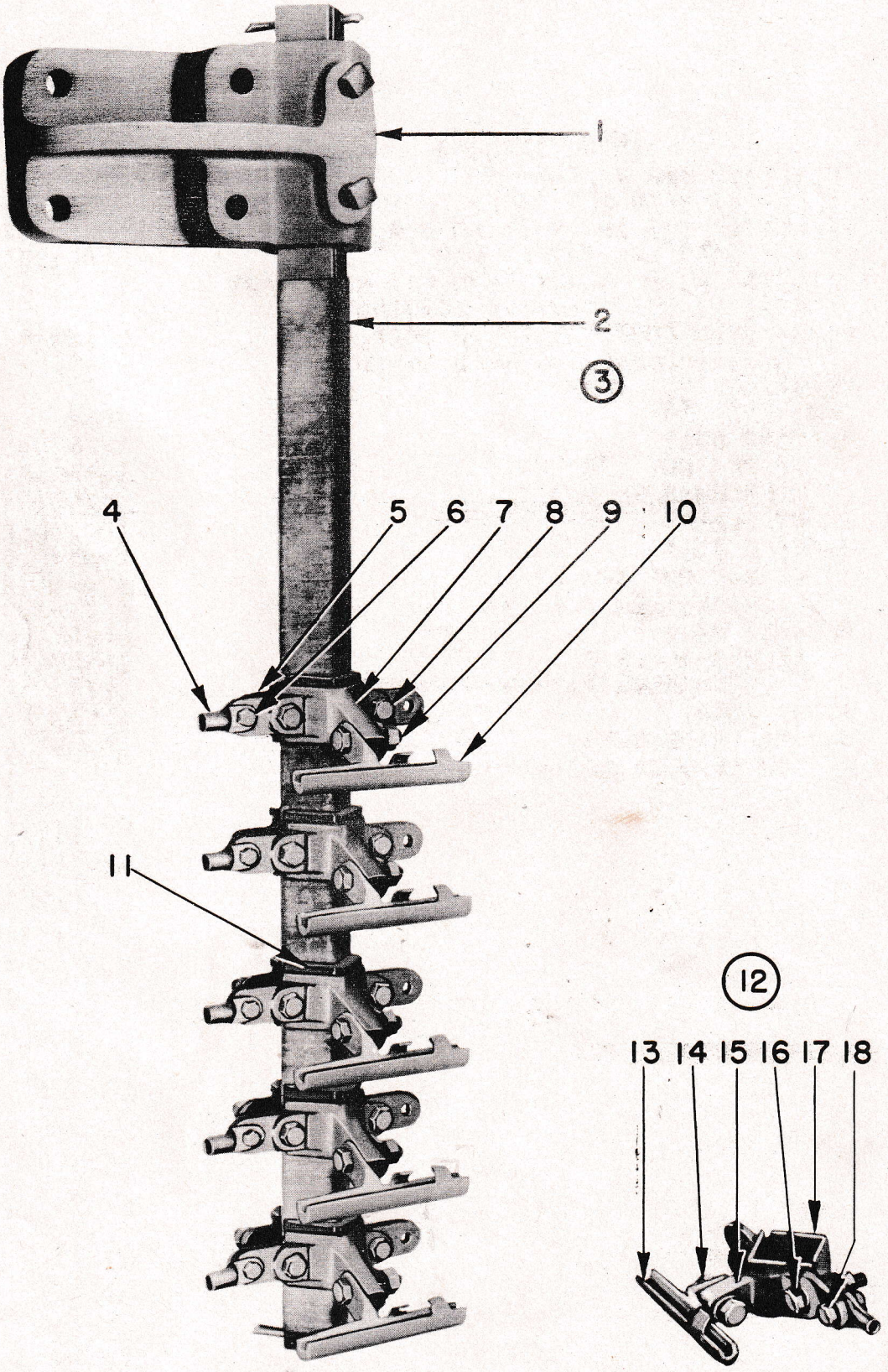

ILLUSTRATION CC-4-1

SHOE COLLECTOR FOR TROLLEY

TROLLEY

REF. NO.	DESCRIPTION	PART NUMBER	AMOUNT REQUIRED
	CRANE 12362-3		
1	COLLECTOR BAR BRACKET	78H7	2
	W/ SQ HEAD SET SCREW	0692V094	4
2	COLLECTOR BAR 1-3/4 IN SQ X 6 FT 2 IN LONG	78F374D74	2
	EACH W/ COTTER PIN	2201V104	4
	36YDS 1 IN BLACK SEAMLESS LINO TAPE		
	36YDS 1 IN STAYBIND WEBBING		
3	SLANT TYPE SHOE COLLECTOR COMPLETE	L 32525	22
	EACH - INCLUDES ITEMS 5 TO 10		
4	TERMINAL		1
5	CAP	78H91	1
6	MACHINE BOLT	0609V054	1
	W/ HEX NUT 3/8 IN	2045V003	1
	LOCKWASHER 3/8 IN	3616V009	1
7	SLANT CLAMP	78F338C1	1
8	MACHINE BOLT	0609V118	2
	W/ HEX NUT 1/2 IN	2045V005	2
	LOCKWASHER 1/2 IN	3615V011	2
9	MACHINE BOLT	0609V114	1
	W/ HEX NUT 1/2 IN	2045V005	1
	LOCKWASHER 1/2 IN	3615V011	1
10	SLANT SHOE	78F170	1
11	MOLDED INSULATORS	78H237	44
	REF 12 THRU 18 NOT USED		

ILLUSTRATION C-9
BRIDGE WIRE SUPPORTS

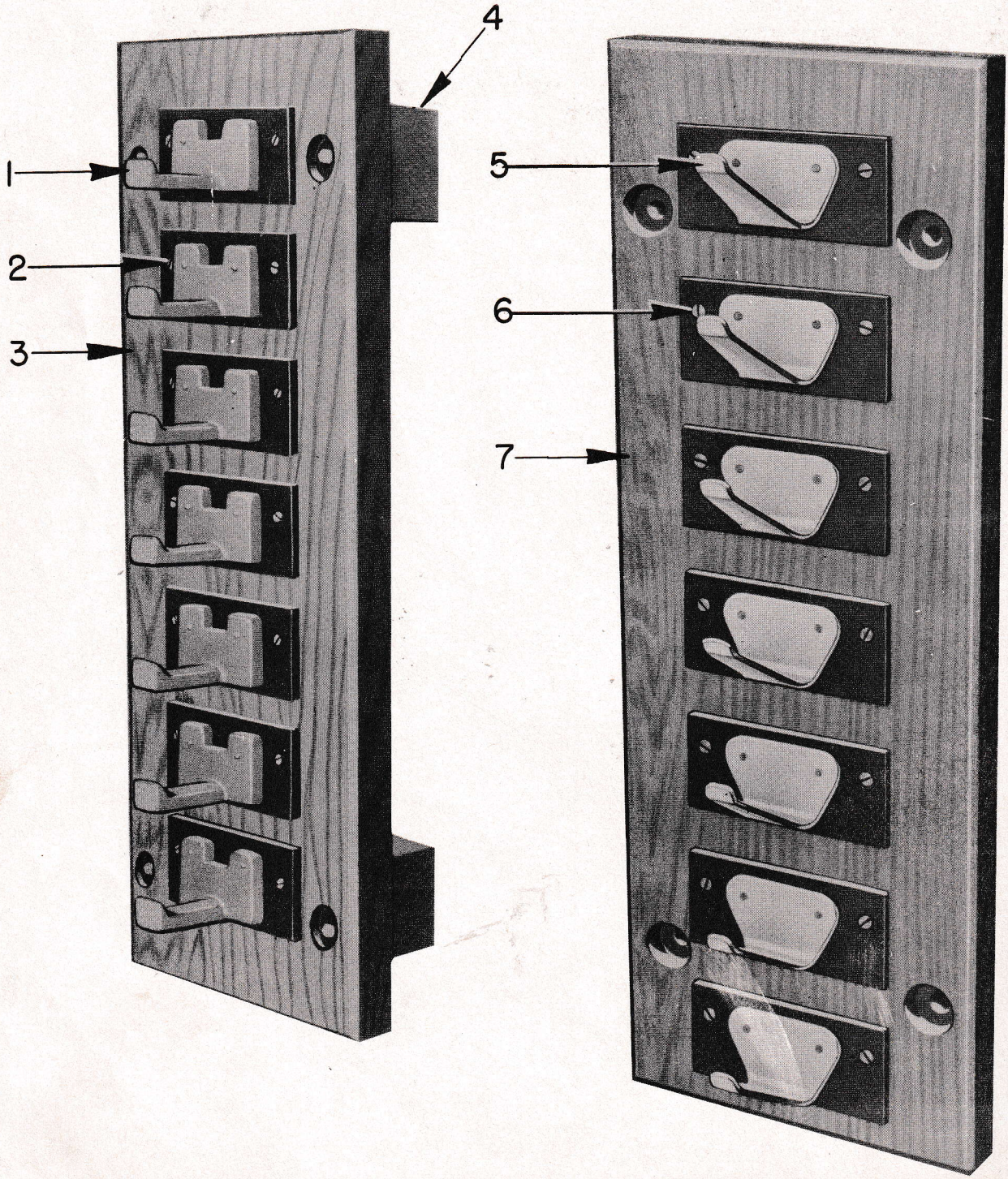

ILLUSTRATION C-9-1

BRIDGE WIRE SUPPORTS WIRES

REF. NO.	DESCRIPTION	PART NUMBER	AMOUNT REQUIR
	CRANE 12362-3		
	I-BEAM GIRDER		
	REF 1 THRU 4 NOT USED		
5	SLANT TYPE WIRE SUPPORT WITH INSULATION PLATE	L 9398	44
6	FLAT HEAD WOOD SCREW	0708V064	88
7	WIRE SUPPORT BOARDS SIZE 9 IN X 1-3/8 IN X 3 FT 7 IN LG	K50013	4
	FOLLOWING PARTS NOT SHOWN		
8	NO 2 BARE COPPER WIRE EACH 62 FT 6 IN LONG		22
9	WIRE CLIPS	32H291	44
10	WIRE STRETCHERS	L 59015	44

NO PARTS WILL BE ACCEPTED FOR RETURN UNLESS AUTHORITY IS FIRST RECEIVED FROM HOME OFFICE

LOCATION OF WAREHOUSES and SERVICE STATIONS

MILWAUKEE 14, WIS.
4400 W. National Ave.
Phone: Orchard 1-4400

HIBBING, MINN.
101 W. Grant St.
Phone: Hibbing 3011

LOS ANGELES 59, CALIF.
2400 East Imperial Highway
Phone: Lorraine 9-7141

SEATTLE 4, WASH.
2909 First Ave. South
Phone: Main 7720

DALLAS 7, TEXAS
1225 N. Industrial Blvd.
Phone: Prospect 7796

BIRMINGHAM 4, ALA.
1629 Vanderbilt Road
Phone: 7-8147

TETERBORO, N. J.
100 North St.
Phone: Hasbrouck Heights
8-1228, 8-1229, 8-1230

●

HOME OFFICE

MILWAUKEE 46, WIS. - 4400 W. NATIONAL AVE.

BRANCH OFFICES

BOSTON 15, MASS. ..... 526 Statler Office Bldg.
BUFFALO 22, N. Y. ..... 257 Elmwood Ave.
CHICAGO 6, ILL. ..... 20 N. Wacker Drive
CINCINNATI 37, OHIO ..... Roselawn Center Bldg.
CLEVELAND 14, OHIO ..... 1821 N. B. C. Bldg.
DALLAS 7, TEXAS ..... 1225 N. Industrial Blvd.
DENVER 2, COLO. ..... 1108 15th St.
DETROIT 26, MICH. ..... 845-46 Book Bldg.
JACKSONVILLE 4, FLA. ..... 804 Bugbee St.
KANSAS CITY 6, MO. ..... 518 Dwight Bldg.
LOS ANGELES 59, CALIF. ..... 2400 E. Imperial Hgh.
MILWAUKEE 46, WIS. ..... 4400 W. National Ave.
MINNEAPOLIS 1, MINN. ..... 840 Lumber Exch.
NEW YORK 7, N. Y. ..... 30 Church St.
PHILADELPHIA 3, PA. ..... 856 Suburban Office Bldg.
PITTSBURGH 22, PA. ..... 1513-14 Farmers Bank Bldg.
ST. LOUIS 5, MO. ..... 101 So. Meramec Ave.
SAN FRANCISCO 5, CALIF. ..... 100 Bush St.
SEATTLE 4, WASH. ..... 2909 First Ave., South
TORONTO 1, ONTARIO, CAN. ..... 330 Bay St.
WASHINGTON 5, D. C. ..... 1029 Vermont Avenue, N. W.

The P&H products illustrated represent the ideal combination of modern engineering skill, the finest of material and workmanship, and the richness of experience gained in 70 years in the construction and development of material-handling equipment. To assist you in maintaining a high degree of operating efficiency, it is essential that prompt and efficient repair parts service is made available. With this purpose in mind, Harnischfeger Corporation offers such facilities either from its Main Plant at Milwaukee, Wisconsin, or at any of its branch warehouses.

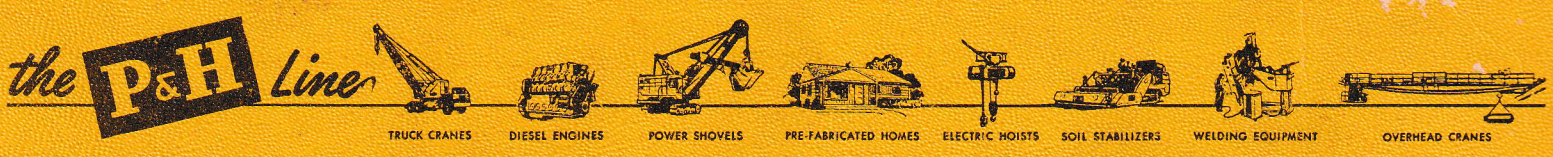

Litho in U.S.A.

RPHC-